

OWNER'S MANUAL

AXOPAR 38 XC CROSS CABIN

MODEL YEAR 2026-2027

AXOPAR

Table of Contents

1 Introduction....5
1.1 Purpose of this manual....5
1.2 Safety symbols....5
1.3 Document conventions....6
1.4 Copyright....6
1.5 Disclaimer....6
1.6 Warranty....7
1.7 Axopar Digital Product Passport....7
2 Safety....9
2.1 Safe and responsible boat operation....9
2.2 Safety diagram....11
2.3 Fire protection and control....11
2.3.1 Fire control equipment....12
2.3.2 Boat owners' and users' responsibilities....13
2.3.3 Checklist: Fire in the engine....13
2.3.4 Checklist: After fire....13
2.4 Carbon monoxide....14
2.5 Carbon monoxide monitor....15
2.6 Smoke alarm....16
2.7 Life raft....16
2.8 Safety labels on board....17
3 Product overview....28
3.1 Purpose of use....28
3.2 Identification....28
3.3 Builder's plate....29
3.4 CE certification....30
3.5 Dimensions and weight....30
3.6 Boat layout....33
4 Product description....35
4.1 Stability and buoyancy....35
4.1.1 Self-draining systems....35
4.1.2 Openings in the hull and deck....36
4.1.3 Bilge system....38
4.1.3.1 Bilge pumps and outlets....39
4.2 Technical systems....41
4.2.1 Electrical system....41

© 2026 Axopar Boats

4.2.2 12V system....43
4.2.3 Main switches....43
4.2.4 Direct supply fuses....44
4.2.5 Fuses....45
4.2.6 Heavy duty fuses....46
4.2.7 Batteries....46
4.2.7.1 Charging the batteries....46
4.2.7.2 Winter storage....46
4.2.7.3 Cleaning the batteries....47
4.2.8 110/230V system....47
4.2.9 Fuel system....48
4.2.9.1 Refueling the boat....49
4.2.9.2 Maintaining the fuel system....50
4.2.10 Freshwater system....50
4.2.11 Septic system....54
4.2.11.1 Toilet seat....55
4.2.11.2 Septic tank....56
4.2.11.3 Shower sump pump....56
4.3 Optional equipment....57
4.3.1 Warmwater system....57
4.3.2 Wet bar in port fender box....57
4.3.3 Heating system....58
4.3.4 Air conditioning....58
4.3.5 Navigation system....59
4.3.5.1 VHF equipment....59
4.3.5.2 Radar....60
4.3.6 Bow thruster....60
4.3.7 Anchor windlass....60
4.3.8 LPG system....62
4.3.8.1 Using the LPG cooker....63
4.3.9 Solar panel trickle charger....65
4.3.10 Lithium house bank....65
4.3.11 Roof racks....66
4.3.12 Searchlight....66
4.3.13 Sunshades....66
4.3.14 Axopar connectivity....67
4.3.15 Activity platforms....67
4.3.16 Engine frame....68
5 Transportation....70
5.1 Lifting the boat....70
5.2 Transporting and storing the boat....71

© 2026 Axopar Boats

6 Operation 73
6.1 Handling devices 73
6.1.1 Steering console 73
6.1.2 Windscreen wipers 74
6.1.3 Steering system 75
6.1.3.1 Checking and topping up oil 75
6.1.3.2 Steering maintenance 75
6.1.3.3 Steering console switch panel 75
6.1.4 Starting the engine 77
6.1.5 Joystick piloting 78
6.1.6 Throttle lever 78
6.1.6.1 Trim and tilt 79
6.2 Swivel seat - Driver and passenger seats 79
6.3 Inspecting the boat 80
6.3.1 Checklist: Regular inspection before leaving harbor 80
6.3.2 Checklist: After using the boat 81
6.3.3 Checklist: After grounding 81
6.4 Handling the boat 82
6.4.1 Checklist: Boat handling before leaving harbor 82
6.4.2 Leaving the jetty 83
6.4.3 Driving the boat 83
6.4.3.1 Emergency stop 83
6.4.3.2 Driving at high speed 84
6.4.3.3 Driving in rough seas 85
6.4.3.4 Maneuvering in narrow channels 85
6.4.4 Visibility from steering position 86
6.4.5 Using the trim tabs 87
6.5 Preventing falling overboard 87
6.6 Anchoring, docking and mooring 89
6.6.1 Fastening points 89
6.6.2 Docking 89
6.6.3 Checklist: Before anchoring 90
6.6.4 Towing and mooring 90
7 Maintenance 91
7.1 Cleaning and maintaining the gelcoat surface 91
7.2 Antifouling 93
7.3 Maintaining the interiors 94
7.3.1 Wooden interiors 94
7.3.2 Plastic and painted surfaces 94
7.3.3 Fabrics 94
7.3.4 Doors and hatches 94

© 2026 Axopar Boats

7.4 Maintaining the cover ... 94
7.4.1 Cleaning the cover ... 95
7.5 Protecting underwater metal parts ... 95
7.6 Preventing corrosion ... 95
7.7 Preventing frost damage ... 96
7.8 Checklist: Before winter lay-up ... 96
7.9 Checklist: Before launching ... 97
7.10 Corrective maintenance ... 97
7.10.1 Deposits ... 97
7.10.2 Scratches and nicks ... 97
7.10.3 Stains ... 97
7.10.4 Deep marks, gouges and holes ... 98

8 Environment ... 99

8.1 Requirements for North America ... 99

9 Checklists ... 101

9.1 Checklist: Fire in the engine ... 101
9.2 Checklist: After fire ... 101
9.3 Checklist: After grounding ... 101
9.4 Checklist: Regular inspection before leaving harbor ... 102
9.5 Checklist: After using the boat ... 103
9.6 Checklist: Boat handling before leaving harbor ... 103
9.7 Checklist: Before anchoring ... 103
9.8 Checklist: Before winter lay-up ... 104
9.9 Checklist: Before launching ... 104
9.10 Checklist: Fuel system ... 105
9.11 Maintenance log ... 105

© 2026 Axopar Boats

1 Introduction

1.1 Purpose of this manual

This owner's manual contains important information and instructions for using your boat.

In this owner's manual you can find important information that help you handle and maintain your boat. The manual contains detailed information about the boat and the systems installed, and general information about handling and taking care of the boat. The latest version of the manual is available in electronic format at the manufacturer's website.

Read the manual carefully and familiarize yourself with your boat before you start to use it. Also ensure that the anticipated wind and wave conditions correspond to the design category of your boat, and that you and your crew are able to handle the boat in these conditions.



This owner's manual is not a substitute for boating safety skills or good seamanship.

If this is your first boat or if this boat type is new to you, ensure you can handle the boat before you set out for the first time.

For information about local sea schools and approved instructors, please ask your boat dealer, the local boat clubs and national motorboat or yacht federations for advice. They can also provide information on specific local regulations on issues such as a driving licence or authorization, registration, insurance, and safety equipment.

This owner’s manual is not a detailed maintenance or troubleshooting guide. If problems occur, contact the boat manufacturer or its local representative. When you are in need of maintenance or repair and alteration work, always turn to competent and trained professionals. Changes that can affect the boat’s security features must be assessed, carried out and documented by competent professionals. The boat manufacturer cannot be held responsible for unauthorized modifications. Every change to the boat’s center of gravity (from highly mounted heavy equipment or a new engine type etc.) significantly affects the stability, trim and performance of the boat.

Keep this manual in a safe place and pass it on to the new owner if you sell your boat. If the manual is mislaid or destroyed, a copy can be ordered from your dealer or downloaded from the manufacturer's website.

See the purchase agreement or order for the scope of your purchase. In case something does not work satisfactorily with your boat or its equipment, you can check the service documents for possible service and repair measures. If uncertain, always contact your dealer.

1.2 Safety symbols

This owner's manual contains danger, warning, caution and notice statements informing the user or authorized service representatives of any potential harm to the product or person.

Hazard is defined as a source of potential injury to a person.

All abnormal use is forbidden, including disregarding information on safety.

© 2026 Axopar Boats

⚠ DANGER **Danger** indicates an imminently hazardous situation which, if not avoided, **will result in death or serious injury**.

⚠ WARNING **Warning** indicates a potentially hazardous situation which, if not avoided, **could result in death or serious injury**.

⚠ CAUTION **Caution** indicates a potentially hazardous situation which, if not avoided, **might result in minor or moderate injury**.

NOTICE **Notice** indicates a potential situation which, if not avoided, **might result in property damage or in an undesirable result or state**.



The information icon calls attention to information that clarifies or simplifies a procedure.

1.3 Document conventions

Units

This manual uses SI units in accordance with ISO 1000. In some cases, other units may have been used alongside.

An exception is the wind velocity, which in the Recreational Boat Directive is given in the Beaufort Scale.

Terminology

In this manual, the right side of the hull is referred to as starboard and the left side as port.

1.4 Copyright

Copyright ©2026 Axopar Boats. All rights reserved.

This Owner's Manual is protected by copyright controlled by Axopar Boats. This manual cannot be wholly or partly reproduced without prior written authorization by Axopar Boats. This material also contains confidential information, which may not be disclosed to others without the prior written consent of Axopar Boats.

1.5 Disclaimer

The material in this manual is for information purposes only.

Axopar Boats reserves the right to change the products without prior notice to improve reliability, function, design or other characteristics of the products. Axopar Boats assumes no liability for any damages, losses, costs or expenses arising out of or relating to the use of this manual or the products described herein.

Axopar Boats makes no representations and warranties with respect to this manual, either express or implied, including, but not limited to, the implied warranties of merchantability and fitness for a particular purpose.

This manual was originally written in English. Should there be any inconsistency or conflict between the English and translated version of the manual, the English version shall prevail.

1.6 Warranty

The Limited Warranty for the boat and the relevant contact information are enclosed as a separate document.

For any warranty claims, please contact your Axopar dealer mentioned on the cover page.

1.7 Axopar Digital Product Passport

From early production of Model Year 2027, Axopar boats are equipped with an NFC chip that provides access to the boat’s Digital Product Passport (DPP). The NFC chip is located on the dashboard. Locate the logo in your boat's steering console panel and read it with your phone.



Claiming your boat

To claim your boat and access its Digital Product Passport:

1. Ensure that NFC is enabled on your smartphone.
2. Hold the smartphone close to the NFC chip on the dashboard.
3. Tap the notification that appears on the smartphone.
4. Follow the on-screen instructions to create an account or sign in.
5. Complete the ownership claim process as instructed.

Once the boat has been claimed, its DPP can be accessed on the owner’s preferred digital device. The owner may also download a Wallet Card to a compatible smartphone for convenient access when away from the boat.

About the Digital Product Passport

The Digital Product Passport provides the boat with a secure digital identity and acts as a certificate of ownership and authenticity. It brings together verified information related to the individual boat, including:

- Factory specifications and factory-installed equipment
- Certificates and ownership-related documentation
- Warranty information

© 2026 Axopar Boats

- Inspection records
- Maintenance recommendations and product updates

Support requests can also be submitted through the DPP, helping Axopar and its authorized dealer network provide faster and more accurate assistance.



If the boat is sold, ownership of the DPP must be formally transferred to the new owner. This ensures that the verified documentation and ownership history remain connected to the boat.

© 2026 Axopar Boats

2 Safety

⚠ WARNING

The boat owner is responsible for making sure that the safety equipment on the boat meets the rules and regulations of the local authorities.

- Keep the necessary safety equipment up to date and on the boat at all times.

Check the preferred location of the major safety equipment in the section ***Safety diagram***.

⚠ WARNING

Overloading the boat can damage the engine, even when shut off.

- When loading the boat, never exceed the maximum recommended load of the boat shown in the builder's plate.
- Always load the boat carefully and distribute loads appropriately to maintain design trim.
- Avoid placing heavy equipment or material high up in the boat.

The liquids in the built-in tanks are not included in the maximum load shown on the builder's plate.

⚠ WARNING

When out on the water, always use the seats intended for the passengers.

Do not exceed the maximum number of persons allowed in the boat, shown in the builder's plate.

The total weight of the persons on board and their personal luggage must never exceed the maximum load of the boat shown in the builder's plate.

⚠ CAUTION

Risk of personal injury and risk of damage to the roof or roof structures.

Do not place or attach any load or equipment on the roof or to the roof structures if there is no specific roof rack.

It is forbidden to enter the roof or dangle from the roof structures.

2.1 Safe and responsible boat operation

Please familiarize yourself to these safety aspects before using the boat.

The person controlling the boat is in charge of the safety of all the passengers as well as other seafarers.

⚠ CAUTION

The owner is responsible for ensuring that the normal mode of operation is maintained. This means that the speed of the craft needs to be matched to the prevailing sea state, the craft being used "with good seamanship behaviour."

Neglecting these safety rules might lead to serious injury or death.

© 2026 Axopar Boats

- Anyone who controls the boat must be competent to operate a boat of this type and size.
- The boat must not be controlled by an unqualified operator or by an operator under the influence of alcohol, drugs or other substance which impair judgement.
- The boat must always be operated at speeds that will not put people or property in danger.
- The captain must constantly be aware of conditions surrounding the boat when underway and especially before sharp turns.
- In challenging conditions such as rough water and winds, impaired visibility, and congested waterways; reduce speed, use appropriate navigation equipment and lights, and use a lookout to identify possible hazards.
- Pay attention to your wake. It can endanger smaller boats or damage moored boats or other property. You are responsible for damage caused by your wake.
- Only allow passengers to ride in areas that do not pose a hazard to themselves or the boat.
- Do not allow passengers to ride on aft folding seats, aft fender boxes or gunwales.
- Passengers must remain seated while the boat is moving.
- Use of alcohol, drugs, or other judgment-impairing substances poses a serious threat to yourself and others. The boat operator is responsible for the behaviour of people on board.
- For every passenger on board, the boat must carry one wearable personal flotation device (PFD).

⚠ WARNING

Speed hazard

This is a high-performance vessel; the speed of the craft needs to be adapted to the environment. To ensure your passengers' safety and comfort, avoid sharp turns in speeds exceeding 40 knots. Never operate your boat at speeds which exceed your ability to react to surprising and unpredictable situations. The captain is always responsible for operating the vessel in a safe way.

⚠ WARNING

Never operate a boat at a speed at which you do not feel comfortable.

⚠ DANGER

Slipping hazard

Deck might be slippery when wet, even on non-skid areas. Be extremely cautious on slippery surfaces and wear suitable footwear.

⚠ DANGER

Do not go out boating in severe weather conditions as this might lead to serious injuries or death. Always get back to shore before the weather turns bad.

© 2026 Axopar Boats

2.2 Safety diagram

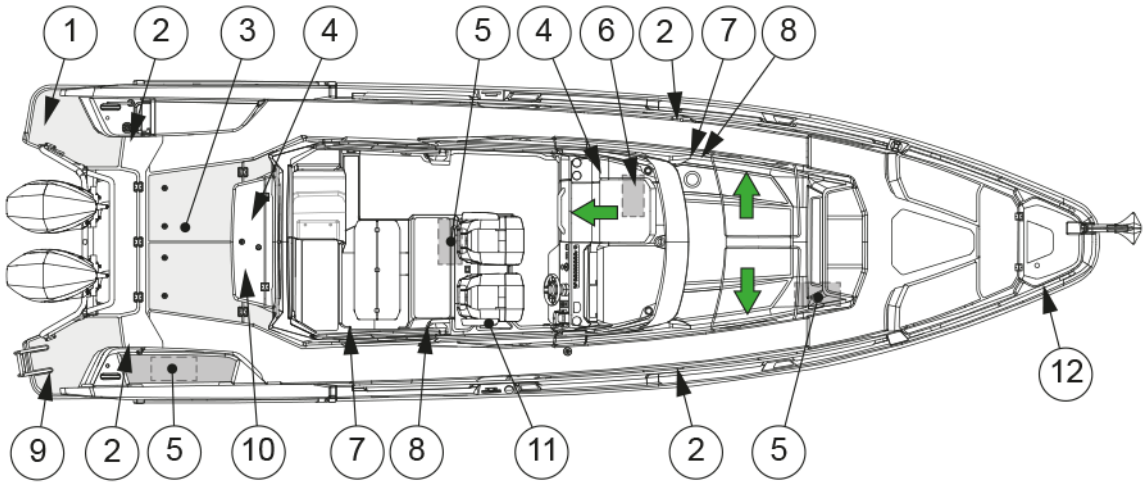

(1) Ladder
(2) Hooking points for safety harness
(3) Life raft storage
(4) Optional LPG cooker shut off valve
(5) Fire extinguisher
(6) Fire blanket, recommended
(7) CO alarm
(8) Smoke alarm
(9) Optional swim ladder
(10) Main switch
(11) Main switch remote control
(12) Optional gas cylinder, LPG main shutoff valve
→ Exit

2.3 Fire protection and control

The most common fire sources are the engine and the stove. If there is a fire in the boat, it may result in an explosion.

⚠ WARNING

Fire usually spreads very fast — be quick to extinguish the fire with the fire extinguisher on the boat!

See the section ***Safety diagram*** for the exact location of the fire extinguisher(s).

If the fire starts to get out of control, leave the burning boat to save lives.

© 2026 Axopar Boats

⚠ WARNING

Always put down the fire by depriving the fire of oxygen.

Do not use water!

Using water in fire involving flammable liquids can spread the liquid and make the fire worse.

⚠ WARNING

If the fire reaches the fuel tank, an explosion may occur and cause a large area around the boat to burn.

- Keep the bilge clean and check it regularly for fuel and gas fumes or fuel and oil leaks.
- Do not hang curtains or other flammable material near or above the LPG cooker or other equipment with naked flames.
- Never leave the boat unattended when the cooker or heater is switched on.
- Never refuel or replace gas containers when the engines are running.
- Never smoke when handling fuel or gas.
- Never block evacuation routes or emergency exits.
- Never block access to safety equipment such as fuel valves or main power switches.
- Never block access to fire extinguishers, visible or concealed.
- Never modify the boat's systems (especially electrical, fuel or gas systems).

2.3.1 Fire control equipment

Check the exact locations of the fire control equipment in the section ***Safety diagram***.

Fire extinguishers

You must fit the boat with hand-held fire extinguishers. The fire ratings of the fire extinguishers must be at least as follows:

- SB Fender box: 188B (USCG: 5-B)
- Behind driver's seat (under floor hatch) and in front cabin: 8A/68B (USCG: 5-B)

Check the exact locations of the fire extinguishers in the section ***Safety diagram***.

The fire extinguishers are not included in the manufacturer's delivery. Before using the boat, it must be furnished with fire extinguishers.

Fire blanket

A fire blanket is ideal for putting out small fires and also one of the best options if a person's clothes catch fire.

- Keep a fire blanket onboard in an easily accessible place.

© 2026 Axopar Boats

2.3.2 Boat owners' and users' responsibilities

It is your responsibility as the boat owner and user to ensure that the fire control equipment is accessible at all times.

- Check the fire extinguishing equipment regularly at the intervals specified for the equipment.
- Replace equipment with expired date immediately with equivalent or better equipment.
- Advice the crew and guests of the location and instructions for use of the fire control equipment, and the location of evacuation routes and emergency exits.

2.3.3 Checklist: Fire in the engine

- Stop the engine.
- Steer the boat up against the wind, if possible.
- Make sure all passengers have life jackets.
- If necessary:
  - Evacuate the passengers.
  - Call for sea rescue.
- Shut off fuel, LPG and main power switches.
- Extinguish the fire.
- Wait until fully certain that the fire has been extinguished before opening the engine cover.

  Carefully open the engine cover and be prepared to use the handheld fire extinguisher if necessary for post-fire extinguishing.
- Put out possible smoldering fires with water.

2.3.4 Checklist: After fire

- Open doors and windows for better ventilation.
- Inspect the boat and its equipment, and repair any damages.
- Contact local authorities, if needed.
- Make sure that the fire extinguishing equipment is refilled or replaced after use.

© 2026 Axopar Boats

2.4 Carbon monoxide

⚠ WARNING

Carbon monoxide (CO) is colorless, odorless, tasteless, and extremely dangerous gas.

All engines, generators, and fuel burning appliances produce CO as exhaust.

Prolonged exposure to low concentrations or very quick exposure to high concentrations may cause brain damage or death.

Open all doors, curtains, windows, and hatches to let fresh air circulate when running an engine or generator or burning any fuel while the boat is anchored, moored or docked.

If you can smell engine or generator exhaust, you are inhaling CO. CO can also be present without the smell of exhaust fumes.

⚠ WARNING

If the CO alarm is activated, make sure all persons onboard exit the closed spaces.

- If exhaust fumes are detected or if CO accumulation is suspected on the boat, take immediate action to ventilate these fumes.
- Turn off all engines and generators.
- Open all hatches, windows and ports to ventilate.

Changing course and speed to place the boat heading into the wind can improve ventilation.

Symptoms of carbon monoxide poisoning are dizziness, ears ringing, headache, nausea and unconsciousness. A poisoning victim's skin often turns cherry red.

Because the carbon monoxide gas is odorless, colorless and tasteless, it is unlikely to be noticed until a person is affected.

⚠ DANGER

- If CO poisoning is suspected, have the victim breath fresh air deeply.
- If breathing stops, resuscitate.
- A victim often revives, but then relapses because organs are damaged by the lack of oxygen.

  Seek immediate medical attention.

High levels of carbon monoxide may accumulate in the following ways:

- Blocking hull exhausts while operating at slow speed or if exhausts are submerged.
- Using canvas curtains.
- Winds blowing exhaust toward boat occupants.
- Operating engine or generator in a confined space.
- Operating with the bow high.

Dangerous concentrations of carbon monoxide are present if:

© 2026 Axopar Boats

- the engine or generator exhaust systems leak
- insufficient fresh air is circulating where people are present
- fumes move from the rear of the boat into the cockpit and cabin area.

To minimize the danger of CO accumulation when the engine and generator are running or when using burning fuel applications:

- Be sure to have sufficient ventilation when using canvas or window-type side curtains when underway, anchored, moored or docked.
- Operate all burning fuel appliances, such as charcoal, propane, LPG, CNG or alcohol cooking devices, in areas where fresh air can circulate. Do not use such devices where there is no noticeable air movement, especially in the cabin, when anchored, moored or docked.
- Do not idle the engine without moving the boat for more than 15 minutes at a time.
- Inspect the exhaust system regularly. See the manufacturer's manual for instructions.

2.5 Carbon monoxide monitor

There is a carbon monoxide monitor system in the boat.

The carbon monoxide monitors are located in all accommodation areas of the boat.

- With regular intervals, check that the monitor system is functioning. For instructions, see the equipment manufacturer's manual.
- It is not possible to turn the CO monitor off when the boat is in use.

See here the description of the audible and visual signals of the monitor.

Low battery voltage can trigger the carbon monoxide monitor to sound an alarm.

Operation	**Audible Signal**	**Visual Signal**
Normal	None	Green led flashes every minute
CO alarm	4 beeps, 5 seconds off - cycle repeats	Flashing red
Alarm malfunction	Beep every 30 seconds	Alternating red/green flash
End of life signal	Beep every 25-30 second	Red red green green flash sequence

© 2026 Axopar Boats

2.6 Smoke alarm

Boat is equipped with smoke alarms.

Smoke alarm is battery powered. When the battery level reaches low level, the smoke alarm will start emitting low battery warning signal.

Smoke alarm may give false alarm if there is steam, condensation, or normal smoke or fumes in its vicinity.

The smoke alarm has a built-in hush or silence feature incorporated into the test button. This feature can be useful when unwanted alarm is caused by cooking or other non-hazardous sources trigger the alarm. Hush or silence feature temporarily silences the alarm and can be activated by pressing the test button for approximately 1 second. When hush or silence feature is activated, the alarm will enter dormant mode for 10-minute period with reduced sensitivity. Reduced sensitivity is indicated by red LED flashing every 10 seconds. After the period is over, the device will signal returning to normal sensitivity with two short beeps. If smoke density increases during hush or silence period, the device will automatically return to alarm mode.

Smoke alarms should be replaced at minimum every 5 years.

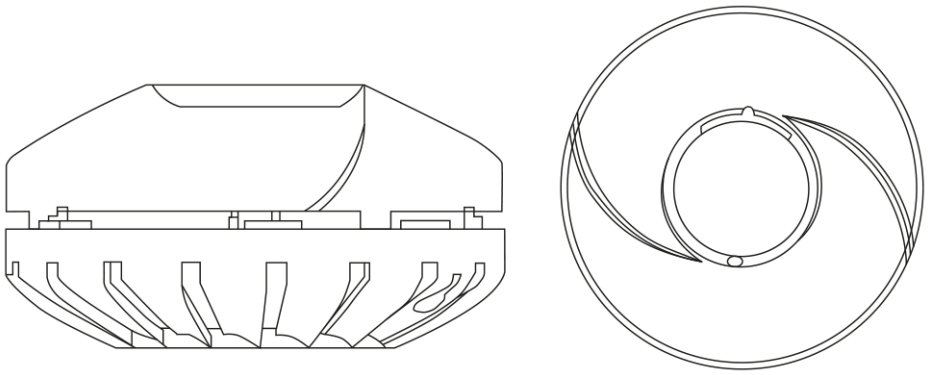

Figure 2.1 Smoke alarm

2.7 Life raft

The boat is not equipped with a life raft by the manufacturer.

Storing a life raft

If you decide to acquire a life raft for your boat, stow it to the aft of the boat, so that it is easily accessible in case of emergency.

Using the life raft

The life raft must be tied to the stern of the boat and prepared for use.

In an emergency, it is easiest and safest to board the life raft from the swimming deck. Switch off the engine before using the life raft.

Follow the life raft manufacturer’s instructions.

© 2026 Axopar Boats

2.8 Safety labels on board

The following picture and table present the location and description of the safety labels on board. Location of the labels may vary depending on the chosen options.

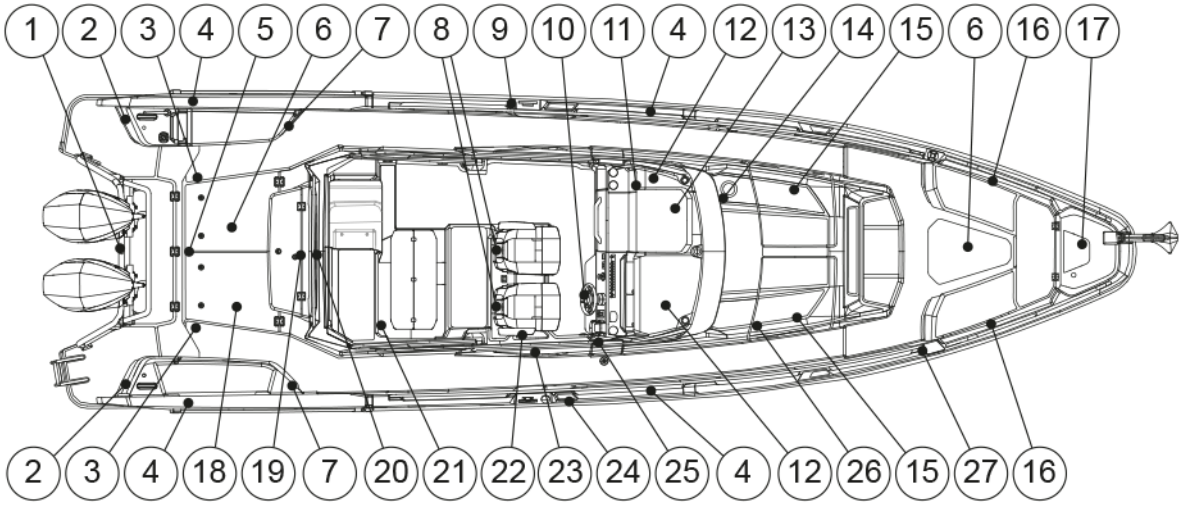

Position	Label	Description
1	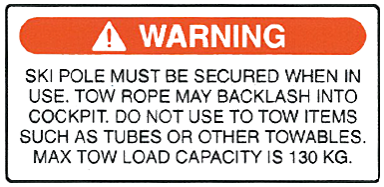	**Warning** Ski pole must be secured when in use. Tow rope may backlash into cockpit. Do not use to tow items such as tubes or other towables. Max tow load capacity is 130 kg.
2		**Danger** Contact with spinning propeller will cause serious injury or death. Stay clear of boat and stay off swim platform and boarding ladder while engine is running.
2	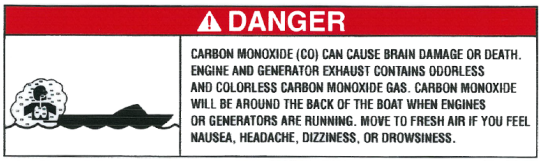	**Danger** Carbon monoxide (CO) can cause brain damage or death. Engine and generator exhaust contains odorless and colorless carbon monoxide gas. Carbon monoxide will be around the back of the boat when engines or generators are running. Move to fresh air if you feel nausea, headache, dizziness, or drowsiness.

© 2026 Axopar Boats

Position	Label	Description
2	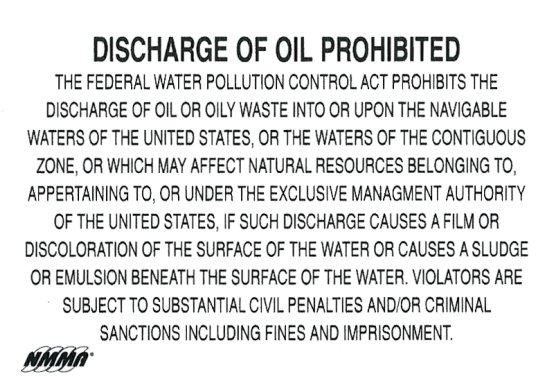	**Discharge of oil prohibited** The federal water pollution control act prohibits the discharge of oil or oily waste into or upon the navigable waters of the United States, or the waters of the contiguous zone, or which may affect natural resources belonging to, appertaining to, or under the exclusive management authority of the Unites States, if such discharge causes a film or discoloration of the surfaces of the water or causes a sludge or emulsion beneath the surface of the water. Violators are subject to substantial civil penalties and/or criminal sanctions including fines and imprisonment. **NMMA**
2	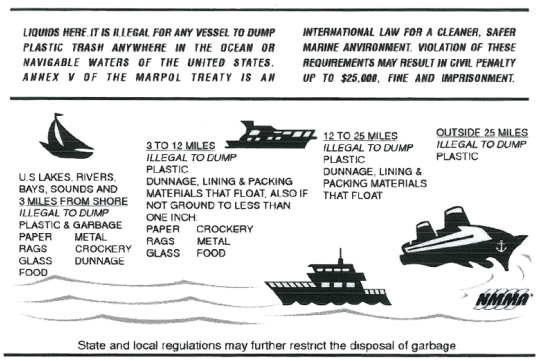	Liquids here. It is illegal for any vessel to dump plastic trash anywhere in the ocean or navigable waters of the United States. Annex V of the Marpol Treaty is an international law for a cleaner, safer marine environment. Violation of these requirements may result in civil penalty up to $25,000, fine and imprisonment. U.S. lakes, rivers, bays, sounds and 3 miles from shore Illegal to dump plastic & garbage, paper, metal, rags, crockery, glass, dunnage, food. 3 to 12 miles Illegal to dump plastic, dunnage, lining & packing materials that float. Also if not ground to less than one inch: paper, crockery, rags, metal, glass, food 12 to 25 miles illegal to dump plastic, dunnage, lining & packing materials that float Outside 25 miles illegal to dump plastic State and local regulations may further restrict the disposal of garbage.
2	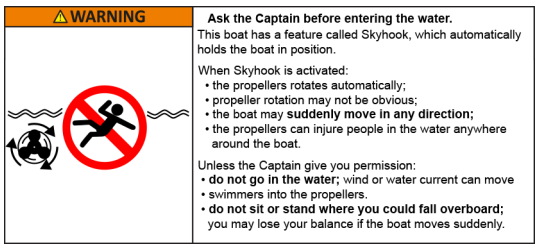	**Ask the captain before entering the water** The boat has a Skyhook feature which automatically holds the boat in position. When Skyhook is activated: • The propellers rotate automatically • The rotation of the propellers may not be obvious • The boat may **suddenly move in any direction** • The propellers may injure people in the water **anywhere** around the boat Unless the Captain gives you permission: • **Do not go in the water**; wind or water current can move swimmers into the propellers • **Do not sit or stand where you could fall overboard**; you may lose your balance if the boat moves suddenly

© 2026 Axopar Boats

Position	Label	Description
3		**Warning** Watertight closure. Keep shut when underway.
4	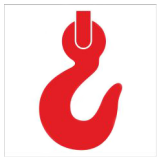	Fastening point
5		**Danger** Leaving hatch open could induce exhaust fumes into cabin resulting in severe personal injury or death.
5		**Warning** Keep shut while underway.
6		**Warning** Installation of maintenance free AGM batteries are only allowed in this area.
7		Fire extinguisher
8		**Warning** Avoid serious injury or death. Unexpected seat rotation may cause ejection of occupant. Lock swivel when speed exceeds 5 mph.

© 2026 Axopar Boats

Position	Label	Description
9		**Caution** Heater exhaust. Hot fumes.
10	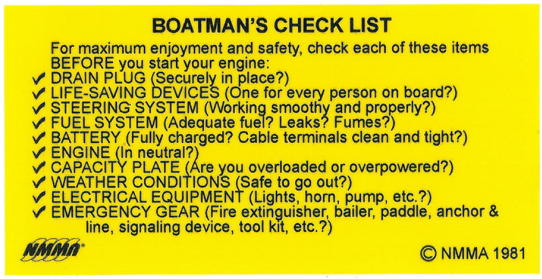	**Boatman's checklist** For maximum enjoyment and safety, check each of these items before you start your engine: - Drain plug (Securely in place?) - Life-saving devices (One for every person on board?) - Steering system (Working smoothy and properly?) - Fuel system (Adequate fuel? Leaks? Fumes?) - Battery (Fully charged? Cable terminals clean and tight?) - Engine (In neutral?) - Capacity plate (Are you overloaded or overpowered?) - Electrical equipment (Lights, horn, pump, etc?) - Emergency gear (Fire extinguisher, bailer, paddle, anchor & line, signaling device, tool kit, etc.?)
10		**Warning** Use caution with skier in tow as tow rope may backlash into cockpit when released.
10		**Warning** Qualified operator to be in control at all times. Operation by an unqualified operator can cause loss of control. This may result in severe injury, death, or property damage. Boat stability and handling will change with weight distribution. Read owners manual before use.
10	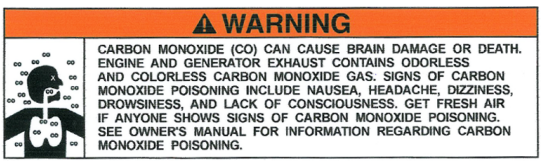	**Warning** Carbon monoxide (CO) can cause brain damage or death. Engine and generator exhaust contains odorless and colorless carbon monoxide gas. Signs of carbon monoxide poisoning include nausea, headache, dizziness, drowsiness, and lack of consciousness. Get frensh air if anyone shows signs of carbon monoxide poisoning. See owner's manual for information regarding carbon monoxide poisoning.

© 2026 Axopar Boats

Position	Label	Description
10		**Warning** Contact with spinning propeller will cause serious injury or death. Shut off engines while people are in the water near the boat, on the swim platform, or on the boarding ladder. Never operate in reverse toward a person in the water.
10	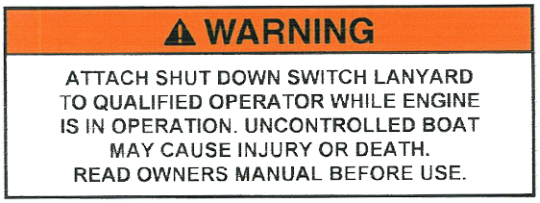	**Warning** Attach shut down switch lanyard to qualified operator while engine is in operation. Uncontrolled boat may cause injury or death. Read owners manual before use.
10		**Warning** Visibility from the seated position at this helm station is limited. Avoid serious injury or death from collisions. Operation from a standing position may be necessary to maintain lookout as required by rules of the road. Reas owners manual.
11		LPG shutoff valve
11	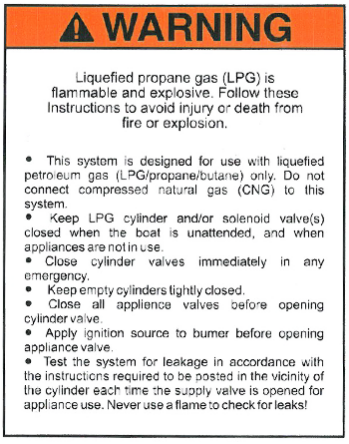	**Warning** Liquefied propane gas (LPG) is flammable and explosive. Follow these instructions to avoid injury or death from fire or explosion. • The system is designed for use with liquefied petroleum gas (LPG/propane/butane) only. Do not connect compressed natural gas (CNG) to this system. • Keep LPG cylinder and/or solenoid valve(s) closed when the boat is unattended, and when appliances are not in use. • Close cylinder valves immediately in any emergency. • Keep empty cylinders tightly closed. • Close all appliance valves before opening cylinder valve. • Apply ignition source to burner before opening appliance valve. • Test the system for leakage in accordance with the instructions required to be posted in the vicinity of the cylinder each time the supply valve is opened for appliance use. Never use a flame to check for leaks.

© 2026 Axopar Boats

Position	Label	Description
12		Do not drink the water.
13		**Warning** Open flame appliances can ignite gasoline vapors causing death or injuries from fire or explosion. Turn off all open flame appliances when refueling.
13	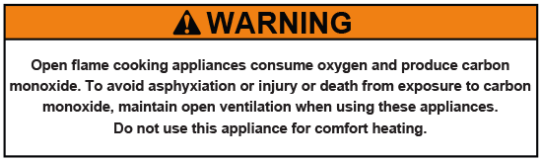	**Warning** Open flame cooking appliances consume oxygen and produce carbon monoxide. To avoid asphyxiation or injury or death from exposure to carbon monoxide, maintain open ventilation when using these appliances. Do not use this appliance for comfort heating.
13		Air con. water shutoff valve
13		Waste tank shutoff valve
14	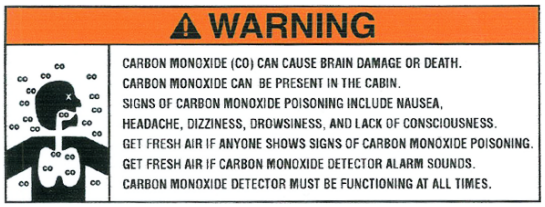	**Warning** Carbon monoxide (CO) can cause brain damage or death. Carbon monoxide can be present in the cabin. Signs of carbon monoxide poisoning include nausea, headache, dizziness, drowsiness, and lack of consciousness. Get fresh air if anyone shows signs of carbon monoxide poisoning. Get fresh air if carbon monoxide detector alarm sounds. Carbon monoxide detector must be functioning at all times.

© 2026 Axopar Boats

Position	Label	Description
15		**Warning** Keep shut while underway
15		Emergency exit
16		**Warning** No ventilation is provided. Fuel vapors are a fire and explosion hazard. To avoid injury or death, do not store fuel or flammable liquids here.
17		LPG shutoff valve
17		**Notice** LPG working pressure Butane: 28mbar Propane: 37mbar
17	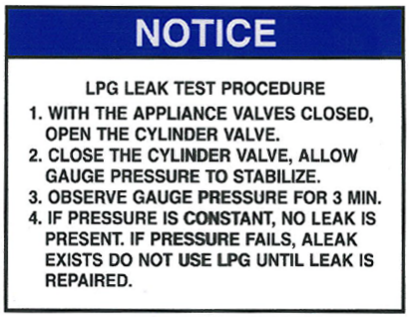	**Notice** LPG leak test procedure **1.**With the appliance valves closed, open the cylinder valve. **2.**Close the cylinder valve, allow gauge pressure to stabilize. **3.**Observe gauge pressure for 3 min. **4.**If pressure is constant, no leak is present. If pressure fails, a leak exists. Do not use LPG until leak is repaired.

© 2026 Axopar Boats

Position	Label	Description
17		**Warning** Open flame appliances can ignite gasoline vapors causing death or injuries from fire or explosion. Turn off all open flame appliances when refueling.
17		**Warning** Keep hands out of machinery. Follow up instructions for remote control enabling.
17		Pay attention to the warnings and read the manual.
17	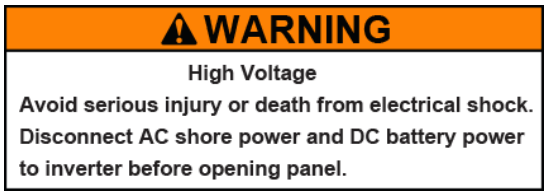	**Warning** High Voltage Avoid serious injury or death from electrical shock. Disconnect AC shore power and DC battery power to inverter before opening panel.
17	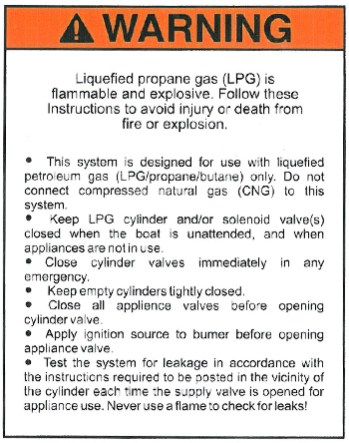	**Warning** Liquefied propane gas (LPG) is flammable and explosive. Follow these instructions to avoid injury or death from fire or explosion. • The system is designed for use with liquefied petroleum gas (LPG/propane/butane) only. Do not connect compressed natural gas (CNG) to this system. • Keep LPG cylinder and/or solenoid valve(s) closed when the boat is unattended, and when appliances are not in use. • Close cylinder valves immediately in any emergency. • Keep empty cylinders tightly closed. • Close all appliance valves before opening cylinder valve. • Apply ignition source to burner before opening appliance valve. • Test the system for leakage in accordance with the instructions required to be posted in the vicinity of the cylinder each time the supply valve is opened for appliance use. Never use a flame to check for leaks.

© 2026 Axopar Boats

Position	Label	Description
17		**Warning** Electrical shock and fire hazard. Failure to follow these instructions may result in injury or death. (1) Turn off the boat's shore power connection switch before connecting or disconnecting the shore power cable. (2) Connect shore power cable at the boat first. (3) If polarity-warning indicator is activated, immediately disconnect cable. (4) Disconnect shore power cable at shore outlet first. (5) Close shore power inlet cover tightly. **Do not alter shore power cable connectors**
17	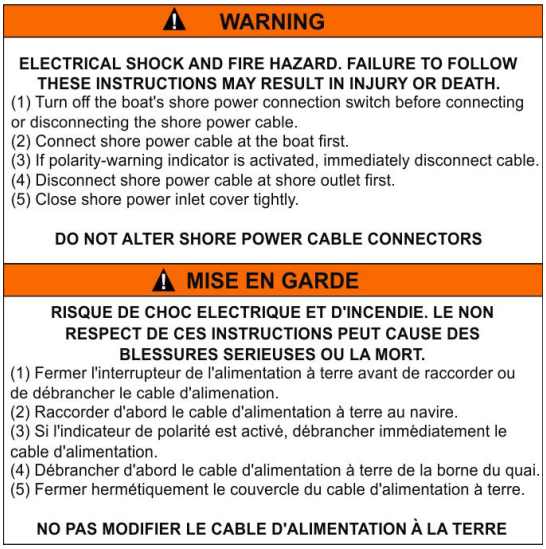	**Warning** Shore power Canada version.
18		Caution If switch is turned off while engine is running alternator will be damaged.
19		**Warning** Do not close the wetbar lid until the grill has completely cooled down.
20		**Warning** Watertight closure. Keep shut when underway.

© 2026 Axopar Boats

Position	Label	Description
21	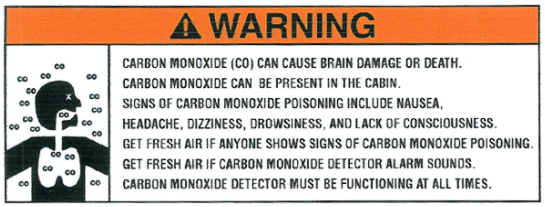	**Warning** Carbon monoxide (CO) can cause brain damage or death. Carbon monoxide can be present in the cabin. Signs of carbon monoxide poisoning include nausea, headache, dizziness, drowsiness, and lack of consciousness. Get fresh air if anyone shows signs of carbon monoxide poisoning. Get fresh air if carbon monoxide detector alarm sounds. Carbon monoxide detector must be functioning at all times.
22		Caution If switch is turned off while engine is running alternator will be damaged.
23	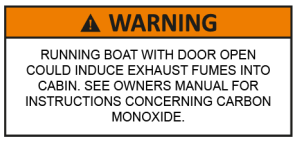	**Warning** Running boat with door open could induce exhaust fumes into cabin. See owners manual for instructions concerning carbon monoxide.
24	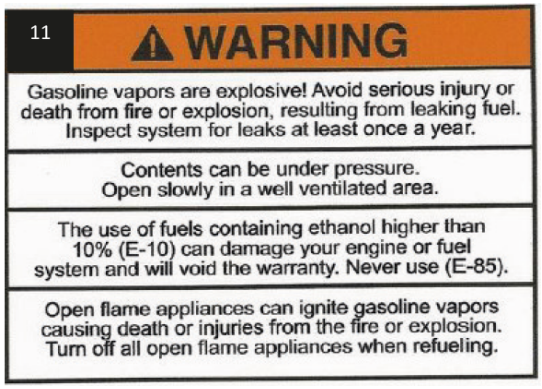	**Warning** Gasoline vapors are explosive! Avoid serious injury or death from fire or explosion, resulting from leaking fuel. Inspect system for leaks at least once a year. Contents can be under pressure. Open slowly in a well ventilated area. The use of fuels containing ethanol higher than 10% (E-10) can damage your engine or fuel system and will void the warranty. Never use (E-85). Open flame appliances can ignite gasoline vapors causing death or injuries from the fire or explosion. Turn off all open flame appliances when refueling.

© 2026 Axopar Boats

Position	Label	Description
24		Canada version. **Warning** Gasoline vapours may cause fires or explosions. Do not overfill fuel tank. Keep the craft away from open flames and sparks. Do not start craft if liquid gasoline or vapours are present. Always replace engine cover (or seat) before starting. **Warning** Avoid serious injury or death from fire or explosion resulting from leaking fuel. Inspect system for leaks frequently.
25		**Warning** Before activating Skyhook: **1.**Check that no one is in the water. **2.**Tell passengers not to enter water. Skyhook makes the propellers spin. This can injure swimmers.
26		Do not drink the water.
27		**Warning** Avoid personal injury. Stay inside deck rails (and gates) when boat is underway.
27		Fore and aft sun pads should not be used when vessel is under way.

© 2026 Axopar Boats

3 Product overview

3.1 Purpose of use

The boat is a recreational boat, thus not suitable for professional use.

3.2 Identification

Each boat has a unique identification code, containing 14 characters and a hyphen.

The height of the code text is 6 mm, and it is located on the starboard side of the stern.

Example: FI - AXO8C017A626	**Data**
FI	Country of manufacturer: Finland
-	Hyphen
AXO	Manufacturer: Axopar Boats
8C	Boat model • C = XC Cross Cabin
017	Boat number
A	Manufacturing month • A = January • B = February • C = March • etc.
6	Last digit of the manufacturing year
26	Model year

© 2026 Axopar Boats

3.3 Builder's plate

The builder’s plate is always located close to the steering position of the boat.

Eurofins Expert Services Oy has inspected that the boat fulfills the Recreational Boat Directive and related standards' requirements.

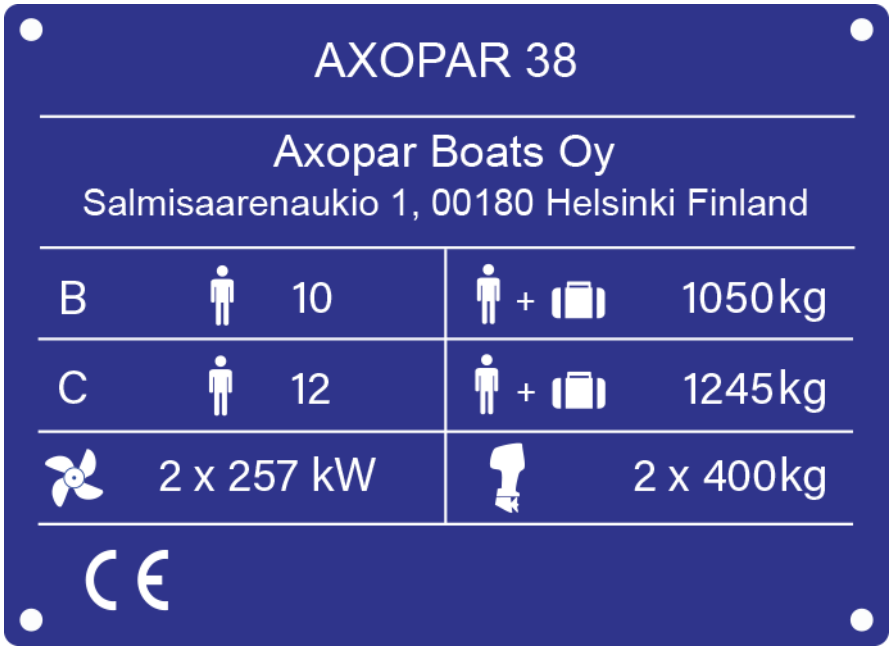

New builder's plate is in effect from early Model Year 2027 production.

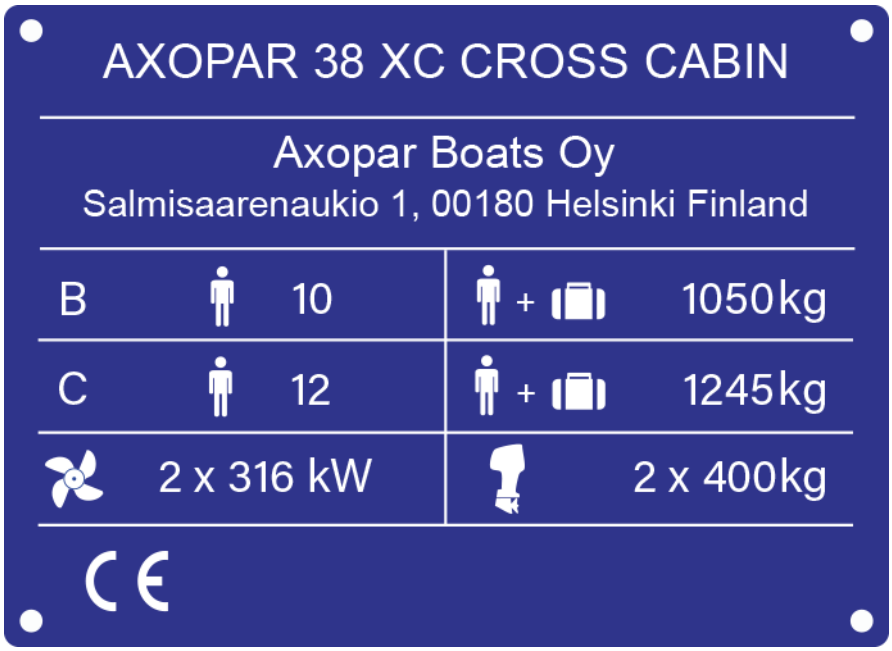

© 2026 Axopar Boats

The builder's plate contains the following information:

- Boat model
- Manufacturer's address
- Maximum number of persons on board
- Maximum load: total weight of persons including personal luggage and basic equipment, and excluding tank contents

3.4 CE certification

This boat is classified to CE categories B and C.

The category is determined according to the maximum number of persons allowed onboard.

The CE certification indicates that a boat is designed and built in such a way that it retains its stability and buoyancy in given circumstances and meets other important requirements that are characteristic of the category in question. One of these requirements is that the boat must be easy to maneuver.

The CE categories classification also signifies that a boat is designed and constructed to withstand the following parameters in respect of stability, buoyancy, and other relevant essential requirements stated.

Category	Description
B. Offshore	The boat is designed for offshore voyages, where conditions up to and including wind force 8 on Beaufort Scale and significant wave heights up to and including 4 meters may be experienced.
C. Inshore	The boat is designed for voyages in coastal waters, large bays, estuaries, lakes and rivers, where conditions up to and including wind force 6 Beaufort Scale and significant wave heights up to and including 2 m may be experienced.

3.5 Dimensions and weight

Dimensions

Dimension	SI units	US units
Hull length (LH)	11.81 m	38 ft 9 in
Overall length (LMAX)	12.56 m	41 ft 2 in
Hull beam (BH)	3.48 m	11 ft 5 in
Overall beam	3.53 m	11 ft 7 in
Draught at max. load (excluding engine)	0.7 m	2 ft 4 in
Draught to props	1.1 m	3 ft 4 in

© 2026 Axopar Boats

Dimension	SI units	US units
Height measured from waterline at light load to top of:		
antennas	3.6 m	11 ft 10 in
mast light	2.8 m	9 ft 2 in
cabin top, when antennas and mast folded	2.1 m	6 ft 10 in

Engines

	SI units	US units
Maximum recommended power with twin engines	2 x 257 kW	2 x 350 hp
From beginning of autumn 2026, maximum recommended engine power was updated to	2 x 316 kw	2 x 425 hp
Maximum recommended engine weight, twin engine	2 x 400 kg	2 x 882 lb

Weight and loading

	SI units	US units
Hull weight (mEC, excluding engines)	4277 kg	9429 lb
Weight of unloaded boat with maximum weight outboard engines (mLC)	6060 kg	13360 lb
Mass on trailer	7060 kg	15565 lb

	Category B		Category C	
	SI units	US units	SI units	US units
Boat weight at maximum load (mLDC)	8080 kg	17814 lb	8275 kg	18244 lb

	Category B	Category C
Maximum number of persons Default weights: • Adult: 75 kg • Child: 37.5 kg	10	12

© 2026 Axopar Boats

Load components

	Category B		Category C	
	SI units	**US units**	**SI units**	**US units**
Maximum recommended load	2020 kg	4454 lb	2215 kg	4884 lb

of which

	Category B		Category C	
	SI units	**US units**	**SI units**	**US units**
Total weight of all persons	750 kg	1653 lb	900 kg	1984 lb

	SI units	US units
Personal luggage	250 kg	551 lb
Life raft weight	45 kg	99 lb
Load on roof racks	50 kg	110 lb
Total weight of fuel, water and other liquids	970 kg	2139 lb

Tank capacity

	SI units	US units
Fuel tank	830 l	219 gal
Fresh water tank	150 l	40 gal
Septic tank	75 l	20 gal
Heater fuel	28 l	7 gal
Fenderbox Livewell	150 l	40 gal

The boat's stability assessment is based on maximum load conditions.

The maximum recommended load only contains the weight components mentioned above.

The weight mLC varies ±10% depending on the options chosen for the boat.

© 2026 Axopar Boats

3.6 Boat layout

The boat has several deck options. The layout of the equipment and the technical components may vary depending on the selected accessories.

The standard boat has an open aft deck.

The front cabin of the boat can be equipped with gullwing doors.

Activity platforms can be chosen to the aft. The platforms can be lowered down to expand the deck area. If you have chosen activity platforms, fender box can be replaced with optional Bench seat with fender storage.

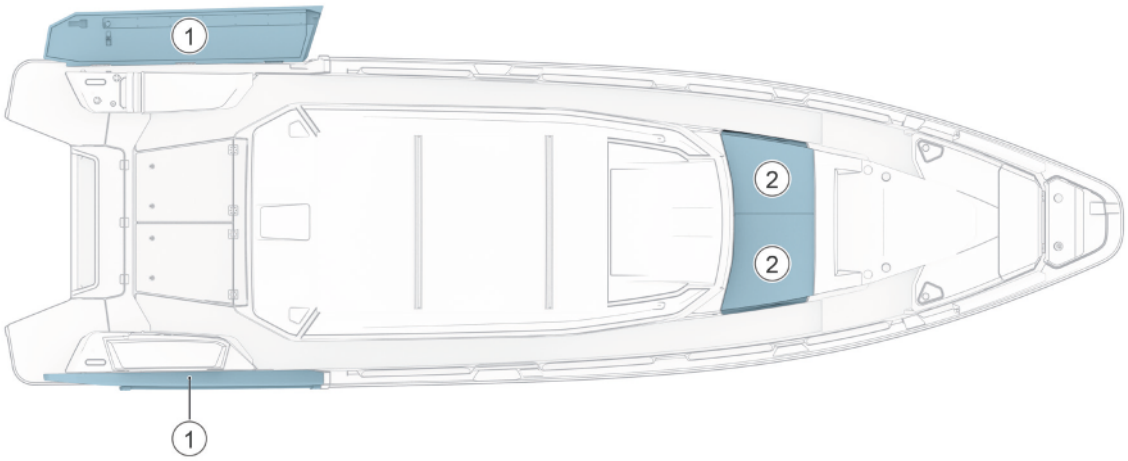

(1) Activity platforms
(2) Gullwing doors

© 2026 Axopar Boats

The boat can be equipped with an open aft, an aft cabin, a wet bar, a u-sofa or a bench.

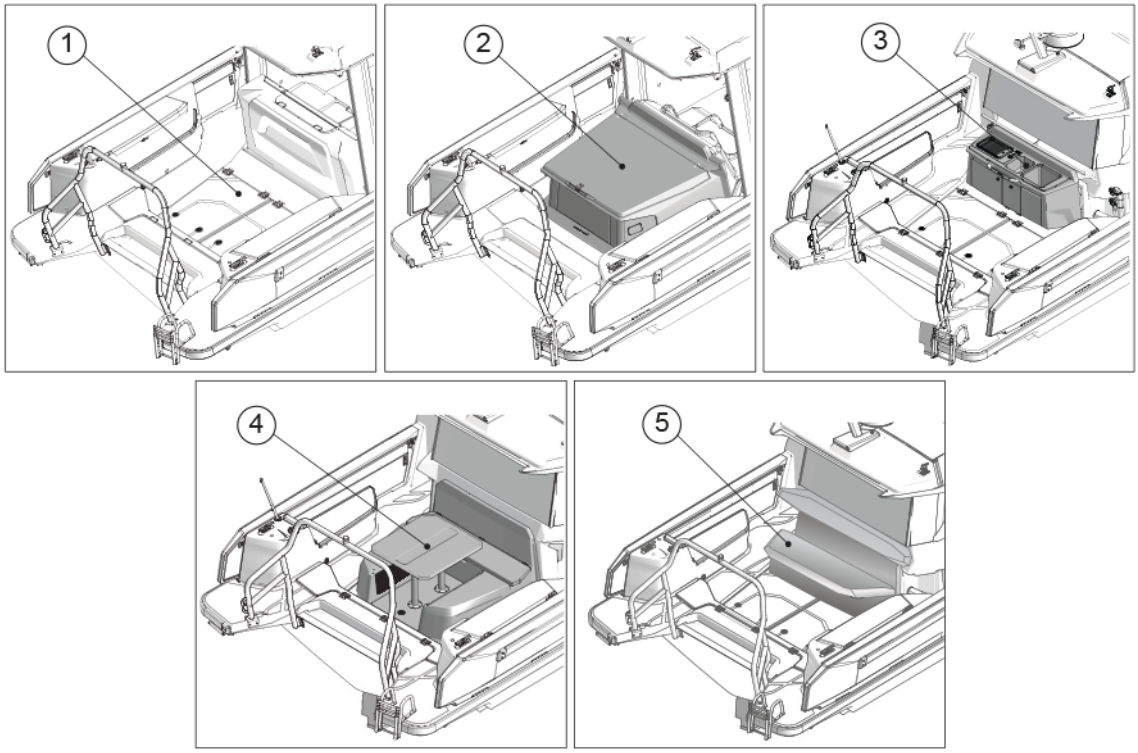

(1) Open aft deck
(2) Aft cabin
(3) Wet bar
(4) U-sofa
(5) Bench

© 2026 Axopar Boats

4 Product description

4.1 Stability and buoyancy

Pay attention to the stability and buoyancy of the boat.

All weight dispositions (for example installing a fishing tower or radar, and engine replacement) can have a significant impact on the stability, trim, and performance of the boat.

- The bilge water level needs to be kept at a minimum.
- The stability of the boat is compromised if any weight is placed in a high position.

In stormy weather, all hatches, compartments and doors must be kept closed to minimize the risk of flooding.

Breaking waves represent a significant danger to stability.

⚠ WARNING To avoid the risk of flooding, always keep the seacocks closed when not in use (for example, the seacock for the toilet's flushing water).

4.1.1 Self-draining systems

The boat is equipped with self-draining systems for the whole deck area. The system is drained through drain holes in the aft of the boat. In addition to rainwater, the drain holes are intended to drain water ending up on the deck through splashing or from breaking waves.

There are drain holes for water in both aft corners of the deck. The openings are directly connected to the sea. The deck of the boat has been designed to allow the water to drain straight into the sea via the water gullies.

⚠ CAUTION Do not block the drain holes when using the boat.

© 2026 Axopar Boats

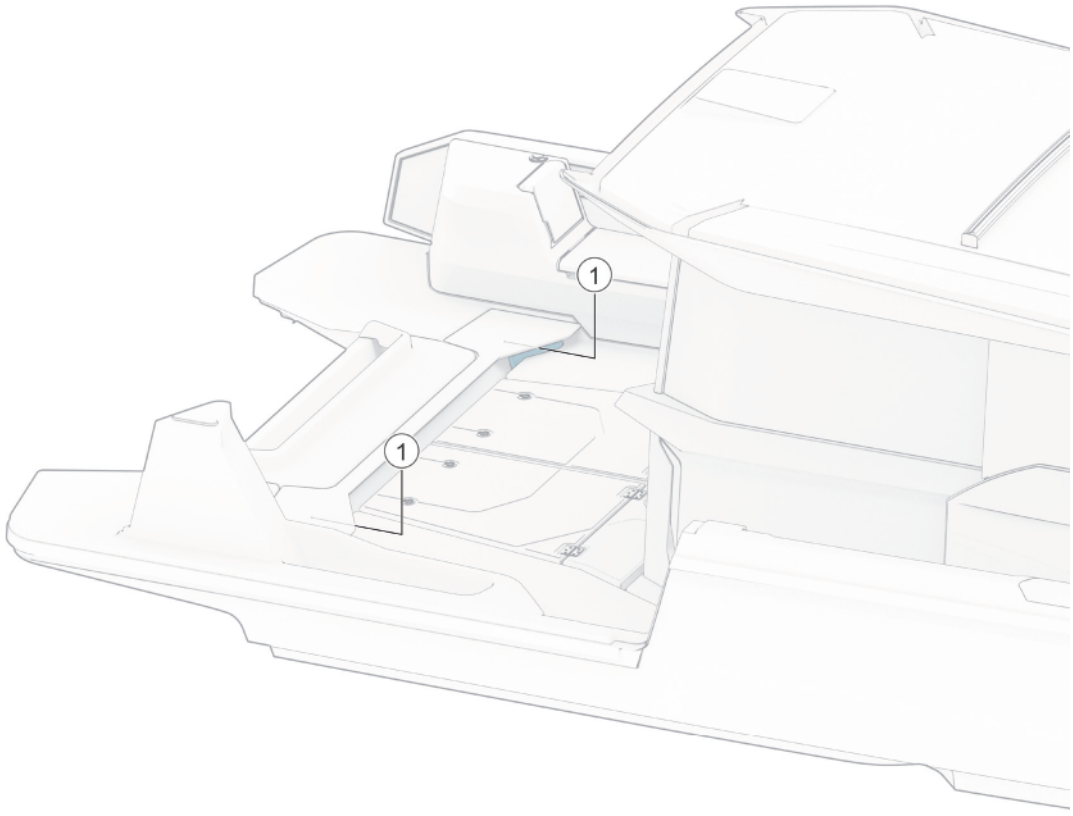

(1) Drain hole

The drain holes must be open at all times. Clean the holes regularly by removing any accumulated debris to prevent clogging.

The system is built so as to drain the water from the deck in normal use.

NOTICE

The self-emptying open space is meant for the removal of such water that ends up on the deck through rain, splashing or from breaking waves. A part of the rain water as well as water condensation in the bilge may end up in the bilge.

- Do not leave the boat unattended in the water for a long time.
- Observe the floating position of the boat and empty the bilge when necessary.

Leaving the boat unattended in the water for a long time may cause damage.

4.1.2 Openings in the hull and deck

There are several inlets through the boat that include valves for opening and closing such inlets. It is recommended to keep these inlets closed if the boat is out of use for a long time, and to open them again when the boat is used again. If the boat is lifted out from water or in rainy conditions, inlets should be kept open.

© 2026 Axopar Boats

Always check that all hatches are securely closed before and after using the boat.

We recommend that you keep the windows, doors, deck hatches, roof hatches, vents and interior doors closed while driving. In stormy weather, always keep them securely closed to minimize the risk of water getting into the boat and to avoid any personal injuries.

In certain conditions and speeds, it is possible that water is sprayed inside through canopies, hatches or other openings, due to negative pressure or other effects. Risk for this can be minimized by closing the canopies, hatches or other openings.

To prevent water intrusion, please make sure the radar mast is protected if it is left in folded position during storage.

Make sure the radar mast is not folded down while the boat is moving.

⚠ WARNING All doors and hatches must be kept shut when under way.

The figure shows the hatches and seacocks that must be kept closed when the boat is left unmanned. Keep hatches closed also while underway.

The location and number of these components depend on the level of the equipment on the boat.

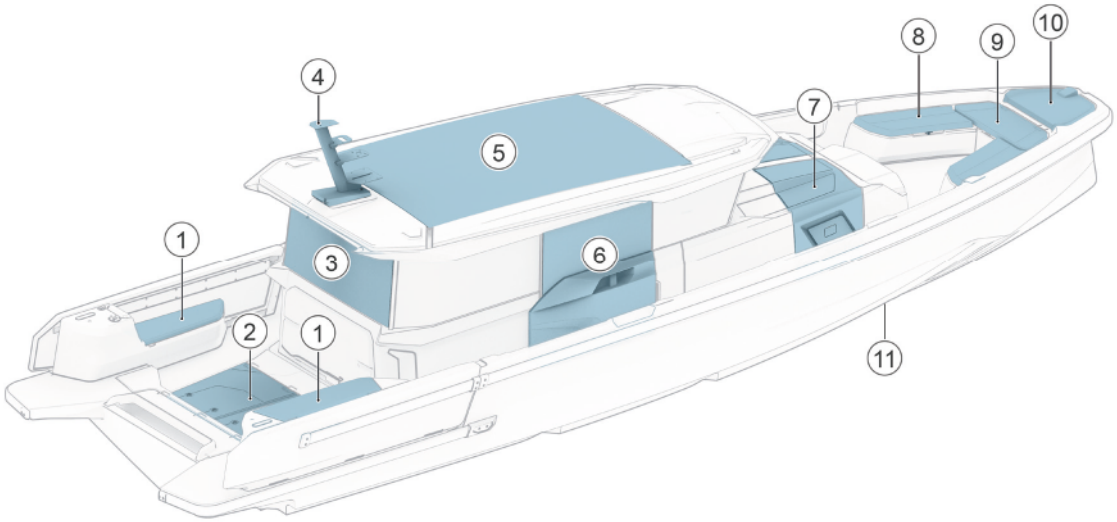

(1) Fender box hatches
(2) Aft cabin hatch or deck hatches
(3) Opening aft window, optional
(4) Radar mast
(5) Roof hatch
(6) Main cabin doors
(7) Gullwing doors of front cabin
(8) Optional storage box hatches
(9) Bow storage hatch
(10) Anchor locker hatch
(11) Air condition raw water seacock, Septic tank seacock

© 2026 Axopar Boats

The figure shows locations of through hull fittings installed to the boat.

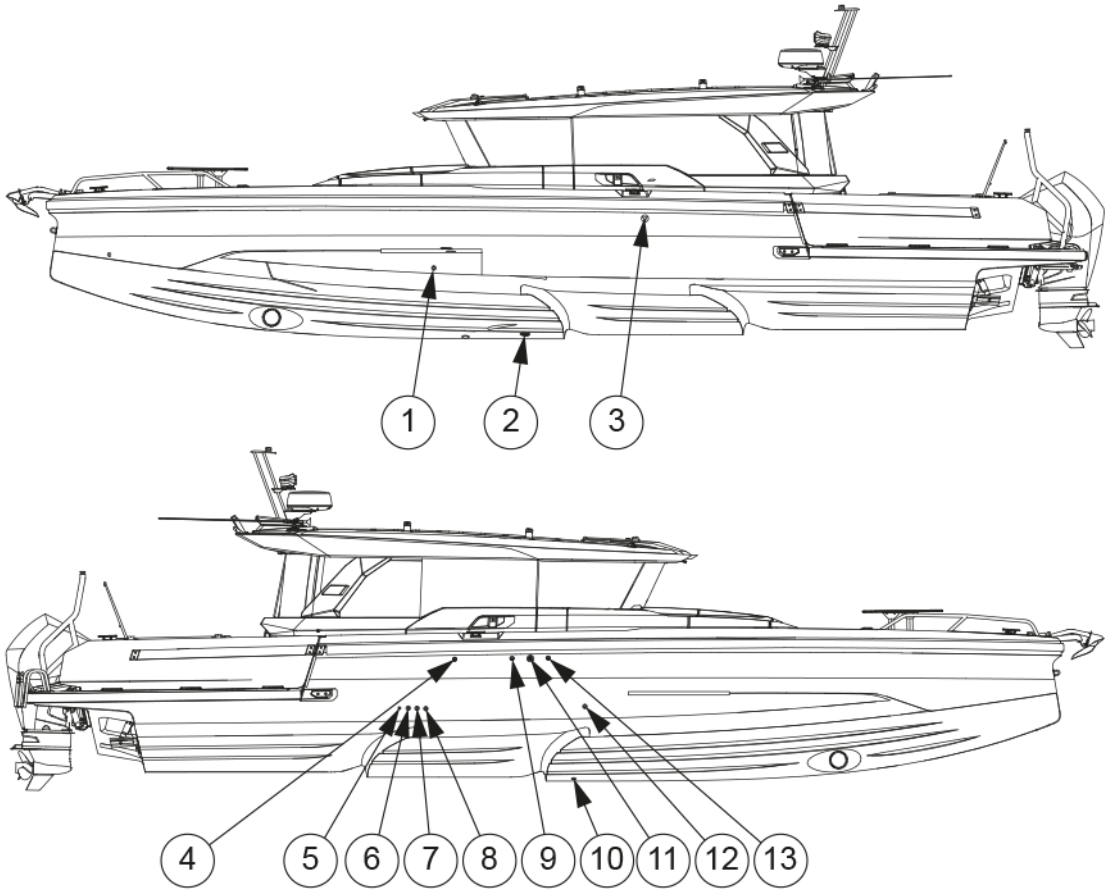

(1) Front bilge pumps outlet
(2) Raw water pickup
(3) Heater exhaust
(4) Heater fuel tank ventilation
(5) Wet bar sink outlet
(6) Manual bilge pump outlet
(7) Aft bilge pump outlet
(8) Aircon water outlet
(9) Fuel tank ventilation (EPA)
(10) Septic tank outlet
(11) Septic tank ventilation
(12) Grey water outlet
(13) Fresh water tank ventilation

4.1.3 Bilge system

The bilge system is designed to enable keeping the bilge water level at a minimum. The system consists of several pumps that cover all the lower sections of the boat.

The boat is equipped with both manual and electric bilge pumps.

© 2026 Axopar Boats

The manual bilge pump is controlled with its handle.

The submersible electric bilge pumps are equipped with a float which triggers them automatically if there is water in the bilge space. The electric bilge pumps can also be controlled manually from the switches on the steering console.

⚠ WARNING

The bilge system is not designed for damage control.

The combined capacity of the bilge system is not designed to pump out the boat in the event of hull damage.

NOTICE

Keep the bilge area clean by washing it ever so often using bilge cleaner or biodegradable soap and water. Clean bilge significantly helps noticing signs of leaks or other problems that may occur.

NOTICE

- Check the functionality of the bilge pumps regularly by manually activating them.
- Remove any waste from the intakes.
- Clear the pump outlets from debris.

NOTICE

Do not run the pumps dry for a long time. The pumps will be damaged.

NOTICE

Avoid pollution.

Since the bilge system comprises of several automatic and manual pumps that cover all areas of the boat, the risk of accidental discharge of contaminated water by automatic pumps needs to be minimized.

Mitigate the risk by checking the bilge water regularly for contaminants such as oil, diesel, and glycol.

Before every use

Make sure that:

- The bilge pumps can operate freely, and there are no objects blocking operation.
- Water can flow through the strainer, and there is no muck or material restricting the water flow.

  Clean the strainer by pushing the lock tabs in the pump motor and lifting the motor unit off.

4.1.3.1 Bilge pumps and outlets

Bilge pump output

Bilge pump output is 30 liters (8 gallons) per minute.

When replacing bilge pump, ensure minimum capacity requirement is fulfilled.

Bilge pump locations

The manual bilge pump's control handle is located in the port side stowage casing of the aft deck.

© 2026 Axopar Boats

The electric bilge pumps are submersible. One electric bilge pump is located under the berth of the aft cabin or under the storage hatch. Another electric bilge pump is located under the front cabin floor.

The electric bilge pumps are by default in the automatic mode and pump out the bilge once the float-switch is triggered. The electric bilge pumps can also be started manually from the boat's main control panel.

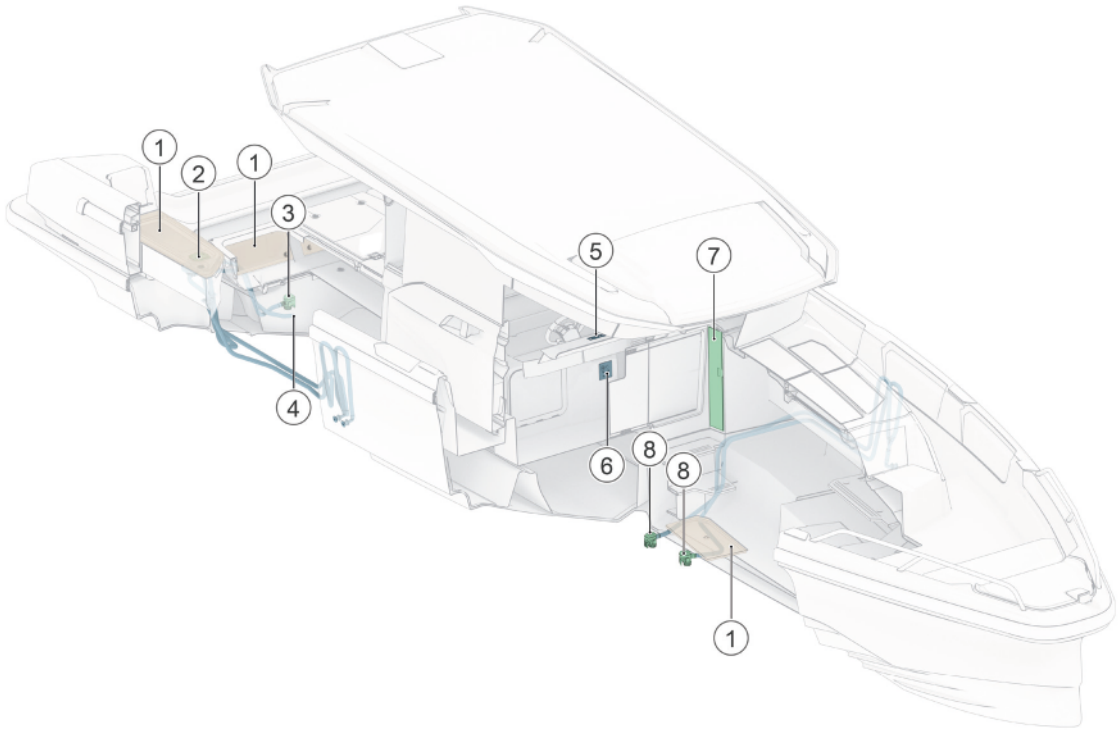

(1) Access hatch to bilge pump
(2) Manual bilge pump
(3) Electric bilge pump
(4) Manual bilge pump, intake
(5) Aft and bow electric bilge pump controls
(6) High bilge water alarm panel
(7) Secondary bow bilge pump control
(8) Electrical bilge pumps, bow

Bow area is equipped with two electric bilge pumps. Secondary bow bilge pump control is located in the electric panel.

© 2026 Axopar Boats

4.2 Technical systems

4.2.1 Electrical system

⚠ WARNING

Risks of fire, explosion and electric shock!

Improper use of electric DC and AC systems may result in fire or explosion.

Improper use of electric AC systems may result in electric shock.

Follow the instructions carefully.

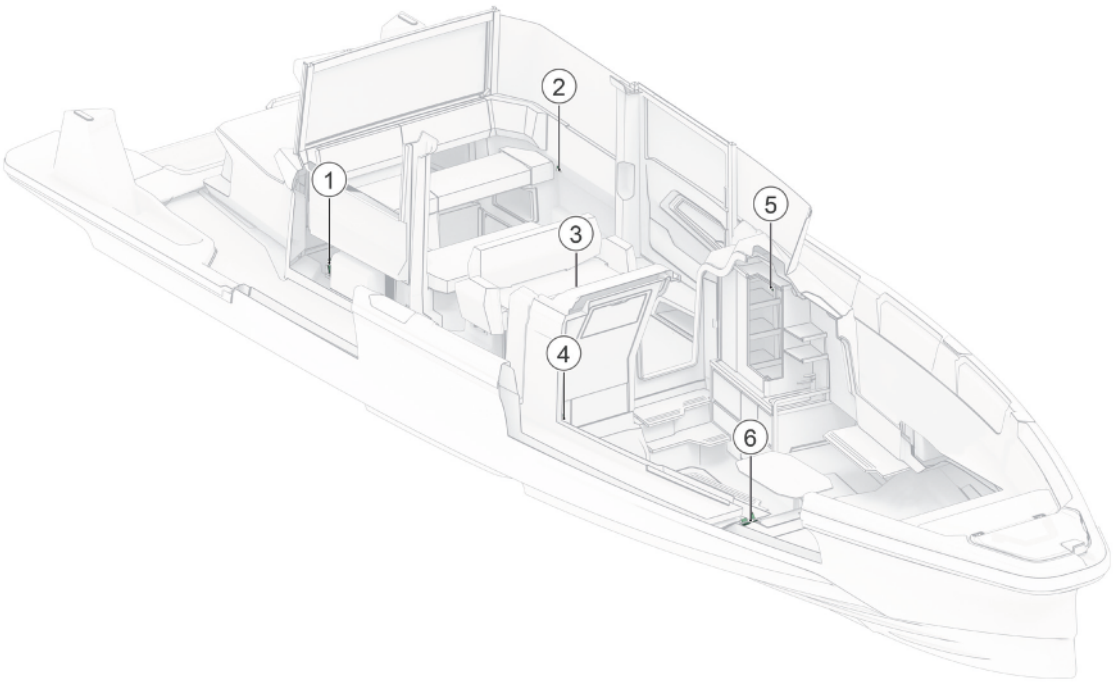

(1) USB and AC socket
(2) USB and AC socket
(3) Wireless phone charger
(4) AC socket (only without toilet compartment)
(5) AC socket
(6) USB and AC socket

© 2026 Axopar Boats

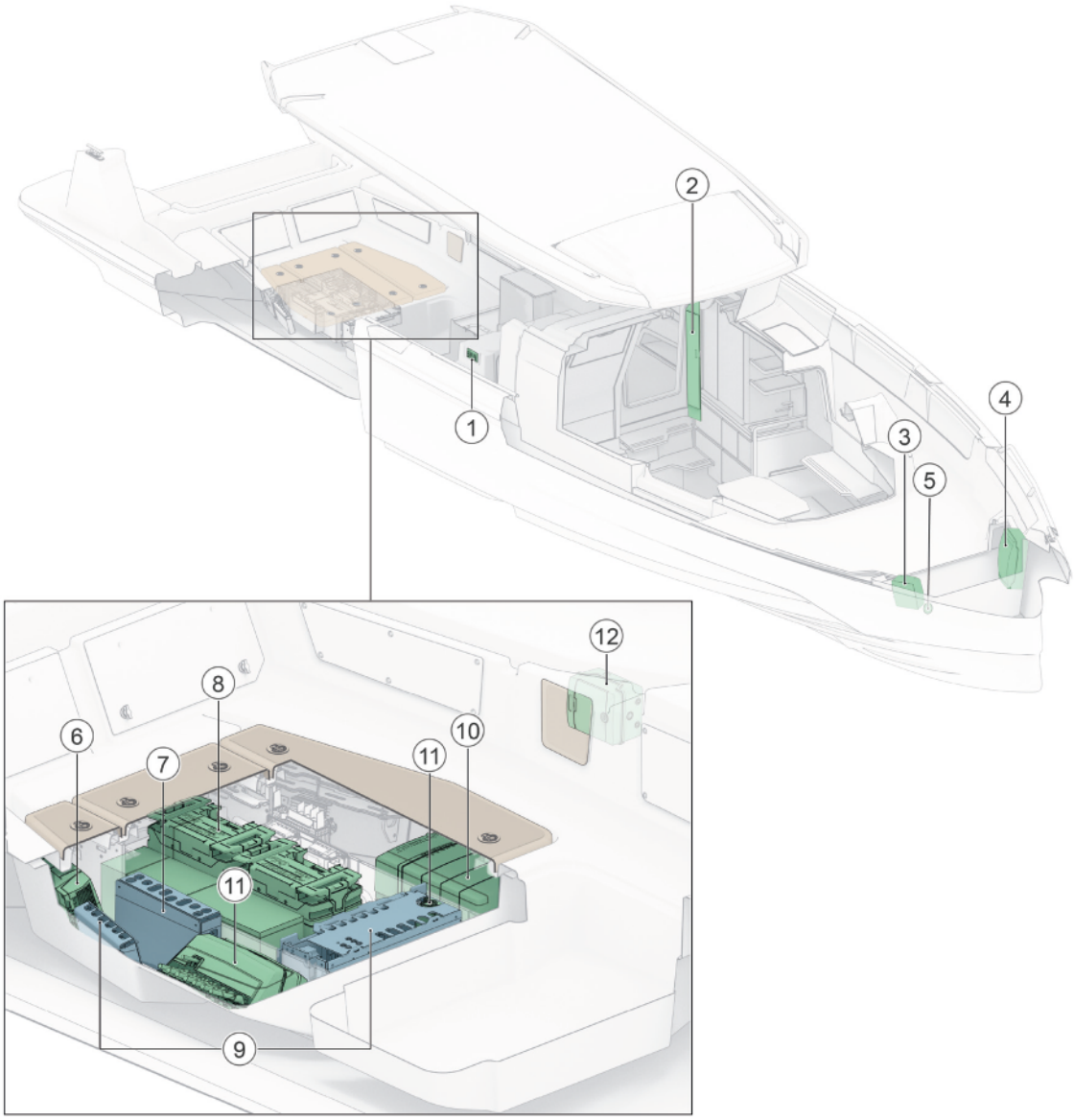

(1) Main switches
(2) DC fuse panel
(3) Shore fuse unit
(4) AC fuse unit
(5) Shorepower socket
(6) Shorepower charger
(7) Engine fuse unit
(8) Batteries
(9) Main fuse units
(10) Inverter/Charger
(11) Remote main switches
(12) Inverter fuse unit

© 2026 Axopar Boats

4.2.2 12V system

Most of the boat's equipment uses the 12V system.

The 12V system consists of engine driven alternators, battery chargers for shore-side electricity, batteries and equipment.

The power is supplied to the batteries via diodes from either the engine alternator or the shore power charger.

To activate the circuits in the 12V system, the main switches for the corresponding circuits need to be activated and the fuses intact. When the electronic circuit is switched on, the equipment can be operated from the main switch panel.

⚠ WARNING

- Never switch off the main switch when the engine is running, because this may cause damage to the alternator.
- Never carry out electrical installations when the power is switched on.
- Never modify the boat’s electrical system or diagrams. Service and maintenance must be carried out by a qualified electrician.
- Never alter or modify the rated amperage of the overcurrent protective devices.
- Never install or replace electrical equipment with components that cause the circuit’s nominal rated amperage to be exceeded.
- Never leave the boat unattended with the electrical system energized, except automatic bilge pump, fire protection, and alarm circuits.
- Maintain any damaged equipment before taking it back to use.
- If boat is equipped with Axopar Connectivity hardware, disconnect battery terminals before service and maintenance of electrical system.

4.2.3 Main switches

The different electronic circuits of the boat are controlled by the main switches.

The main switches allow the batteries to be disconnected from all devices that consume electricity. When the main switches are in the **On** position, the current is conducted to the distribution board and from there to different parts of the boat. Devices that constantly need current are active regardless of the position of the main switches.

When the main switches are active, the text **On** is visible and a led above the text is illuminated.

The design drawing of the boat’s electrical system is presented in appendix ***Electrical diagrams***. The location of the main switches is presented in the section ***Electric system***.

The main switches of the boat are located in the driver's seat base. Power supply to the engines and devices is enabled by pulling the **Start** or **Service** switch to the lower position and pressing the **On** button. There is one main switch for engines and one switch for the service batteries. The optional bow thruster or windlass has a separate remote switch. The boat’s main switch panel is located on the lower part of the steering console.

The manually operated main switches are located under the aft deck, behind hatches. These switches are only for emergency use and normally, these switches are in Auto-mode. In normal situations, use the switches in the steering console.

© 2026 Axopar Boats

Current is fed to the engine by turning the **Start** switch to the **On** position. The current feed to other equipment is achieved by turning the **Service** switch to the **On** position, and feed to the bow thruster and windlasses is achieved by turning the **Aux** switch to the **On** position.

The advanced main switch is containing main switches for both engine batteries and house battery bank. Normally the switches should be in Auto-mode which enables remote operation from the helm. The main switch is also providing data to the MFDS about battery voltage and state of charge. If there is disturbance in the remote operation, the main switch can be accessed by removing the battery box covers, main switches can then be manually operated. The main switch also contains an emergency parallel function.

For more detailed information, please refer to the manufacturer's manual.

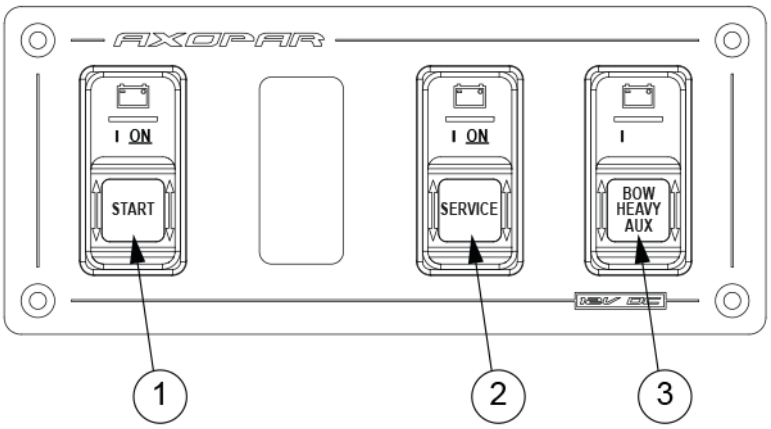

(1) Start batteries
(2) Service
(3) Heavy Aux

4.2.4 Direct supply fuses

Some of the devices in the boat are supplied by direct supply switches. Direct supply switches are intended for such equipment that need current when the main switches are turned off.

When pushed down, the switch is on and when pushed up it is off. The switch indicates a short circuit or interference in the electronic circuit by springing up to the **Off** position. The switch can be reconnected by pushing it back down to the **On** position. Do not reconnect the switch before you have found out the reason for the interference.

The direct supply switches must be left on even if the current from other circuits is switched off. An appliance that is switched off too early may cause the appliance to overheat and become damaged.

⚠ WARNING Turning the direct supply switch off too early may cause the device (for example, the heater) to break or catch fire, because the devices have a ventilation feature that works even if the device is otherwise switched off.

- Make sure the device is cooled down before turning it off completely. For more information, see the manual of the device in question.

© 2026 Axopar Boats

4.2.5 Fuses

The fuse panel includes fuses for the boat's equipment.

The fuses are in the form of trip switches that break the circuit and spring up when tripped. Do not reset the switch before you have found out the reason for the breaker tripping. After that press the switch back down.

⚠ WARNING Before connecting an electric circuit, make sure that the circuit is not damaged and that there will be no short circuit or a fire caused by possible damages in the electric circuit. Any damaged equipment must be maintained or changed before they are again taken into use.

The fuse panel is located on the aft wall of the front cabin. The panel has a combined switch and fuse for macerator, fresh water pump and fridge. The fuse panel also has a 12 V output.

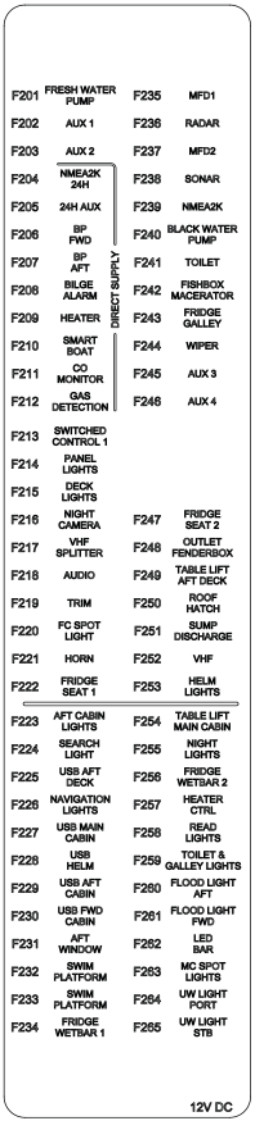

© 2026 Axopar Boats

4.2.6 Heavy duty fuses

The functioning of fuses can be checked from the holes in the fuse's cover. If the metal strip visible in the hole is unbroken, the fuse is operational.

If the metal strip is damaged, meaning that an overload has occurred, contact a qualified nautical electrician.

⚠ WARNING

Opening the cover is not recommended, as there is a danger of electric shock and serious injury.

If the metal strip is damaged, contact a qualified nautical electrician. If it is necessary to open the cover, make sure that all the current cables from the batteries are disconnected.

4.2.7 Batteries

The standard boat is equipped with a start battery only, and a service battery is optional (dual battery system).

The start battery supplies current to the engine and engine-related equipment, and the service battery for other appliances and equipment on the boat.

The batteries are located in the aft of the boat. The exact location of the batteries is presented in the section ***Electrical System***.

⚠ WARNING

Only use maintenance-free batteries in the boat.

- When you leave the boat, switch off the main switches unless the shore power cable is connected.
- Remove the batteries from the boat for winter storage.
  - When removing a battery, detach the negative pole first.
  - When disconnecting batteries, be careful not to touch both poles at the same time with a metal tool.

4.2.7.1 Charging the batteries

⚠ WARNING

- Remember that the batteries discharge an explosive oxy-hydrogen gas at a voltage of 14.4 volts.
  - The voltage of a normal battery in unloaded status is 12.3-12.7V.
  - During charging, the voltage increases and the charging regulator stops the charging process automatically at a preset level.

4.2.7.2 Winter storage

For winter storage, the batteries can be left on board only if they are fully charged.

© 2026 Axopar Boats

A partially discharged battery can freeze and crack. Always disconnect the cable terminals from the battery to avoid oxidation. When removing batteries, disconnect the negative pole first and make sure that there are no flammable or explosive materials or liquids nearby. When putting the batteries back in place, connect them in reverse order (positive pole first).

4.2.7.3 Cleaning the batteries

The top of the batteries needs to be cleaned regularly to avoid current leakage between the cells. If the battery is located in a separate area, it is normally sufficient to clean it in the spring and autumn.

Make sure that the air holes in the cell plugs are open so that gas can be vented.

The terminals and cable terminals must be lubricated to prevent deposits and corrosion.

4.2.8 110/230V system

You can choose to equip your boat with the optional 110/230V AC system with a shore power connection, which will allow you to use devices that run on the standard mains current.

The system obtains its power from an external supply on shore or from the jetty (shore power). In the European market the system used is 230V and in the American market 110V.

The system functions when a shore power cable has been connected to the shore power socket connection.

1. Turn off the shore power switch before connecting or disconnecting the cable.
2. Connect the shore power cable to the boat before connecting it to the shore power.
3. Disconnect the shore power cable from the shore power before disconnecting from the boat.
4. Close the hatch of the boat’s shore power connection.

⚠ CAUTION Unplug the shore power cable before starting the engines. Starting the engines with the shore power cable connected may break the battery isolators.

The system’s main fuse is located in a separate control panel. The system includes a battery charger, which starts charging batteries automatically when the boat has been connected to shore power. The location of the components is presented in the section ***Electrical System***.

The shore power system needs to be checked at least biannually. Always disconnect the shore power cable when the system is not in use. Metal casings of installed electrical equipment must always be connected to earth in the boat electrical system. Use electrical equipment equipped with earth protection only.

The boat can be equipped with optional sine wave 12V 3kW inverter. Inverter provides power and allows the use of small AC equipment whilst out of reach from shore power. The inverter comes with its own display, please see the manufacturer's manual for the functionality. Inverter is located in the port side under the deck behind access hatch. Battery monitor brings the battery charge level information to the multifunction display via the NMEA 2000 network.

Although the inverter can provide high surge power up to two times the rated output power, high surge loads may still trigger the inverter protection system.

© 2026 Axopar Boats

⚠ DANGER

Risk of electric shock and fire!

- Do not touch an energized high voltage system.
- Do not change the plug of the shore power cable. Use compatible connectors only.
- Try to minimize the risk of electric shock, short circuit and fire.
- Do not allow the shore power cable to hang in the water. If it does, a hazardous electric field could be created in the water.
- Never modify the connections on the shore power cable. Use compatible connectors only.
- If the earth fault breaker is tripped, disconnect the shore power cable immediately. In such a case contact a qualified electrician for repairs before the system is used again.

⚠ DANGER

To avoid an electric shock and risk of fire:

- Switch off the shore power switch before connecting and disconnecting the cable.
- Connect the shore power cable to the boat before connecting it ashore.
- Disconnect the shore power cable ashore before disconnecting it from the boat.
- Close the hatch to the shore power socket on the boat carefully, avoiding getting it wet.

4.2.9 Fuel system

The boat has a fixed fuel system and a water-separating fuel filter on the suction line.

Instead of the fuel system used in the European region, the boats produced for the American region use the EPA (United States Environmental Protection Agency) fuel system regarding the NMMA (National Marine Manufacturers Association) certification rules.

See the fuel system drawing in appendix ***Fuel system***. For care and maintenance of the fuel system, see the instructions in the engine manual.

⚠ WARNING

Never start the engines if there is strong gasoline odor present.

⚠ WARNING

Do not smoke or handle open flames when refueling.

Remember that it is not allowed to store fuel in spaces not specifically designed for it. Since there is no ventilated storage space on this boat, possible spare fuel cans must be stored on deck.

Fuel system component locations

- The fuel tank is located in the middle of the keel. Prevent damage to the fuel lines.
- The inlet pipe for fuel is located in the starboard side of the deck.

© 2026 Axopar Boats

- If the boat has been equipped with an extra diesel tank, the inlet fitting and tank are located in the aft of the boat.
- The fuel tank valves and the fuel filter are located under the driver's seat. The EPA fuel system is equipped with an automatic fuel valve.

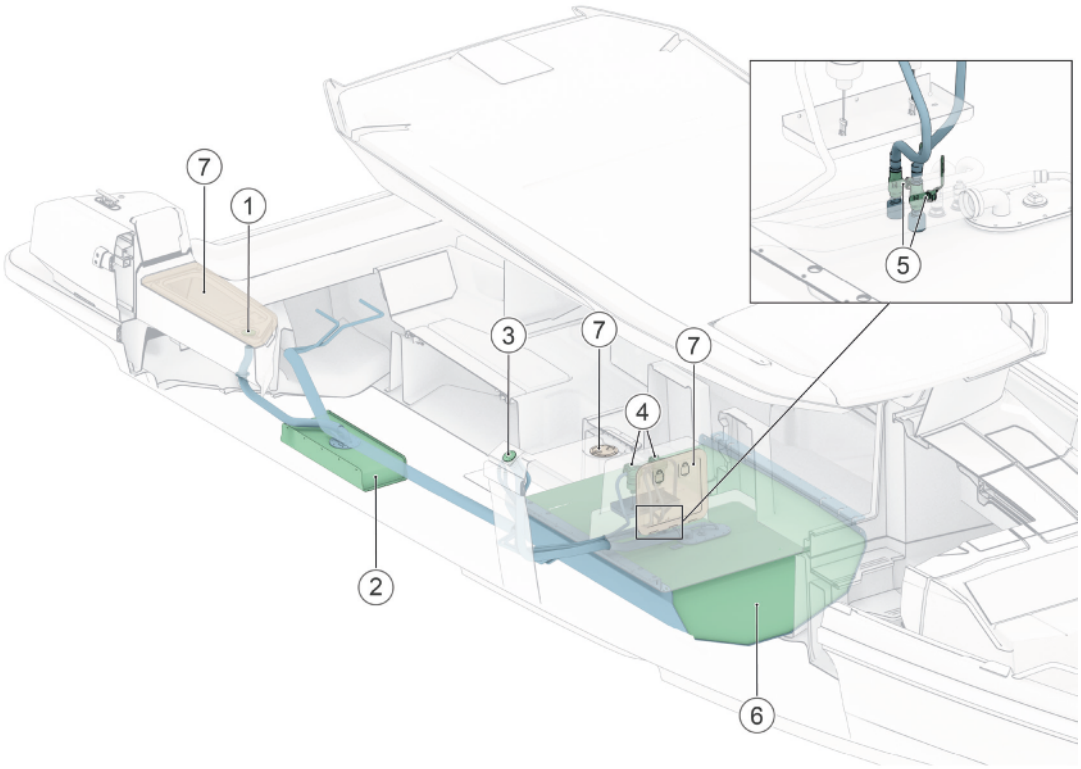

(1) Diesel tank inlet fitting (under hatch)
(2) Diesel tank
(3) Fuel inlet fitting
(4) Fuel filter
(5) Fuel tank valves
(6) Fuel tank
(7) Fuel tank compartment maintenance hatch

4.2.9.1 Refueling the boat

The boat's engines run on gasoline. Optional heater system uses diesel fuel.

Before refueling, stop the engine and any electrical equipment. Make sure that the boat is securely docked.

If the boat has optional decking material, wet down the deck with water before refueling. This ensures that any fuel spillage will float on the water and not penetrate the decking material.

Never leave the nozzle unattended during fueling. The nozzle will automatically shut off when the tank is full. Do not try to top off or overfill the tank.

© 2026 Axopar Boats

After refueling, make sure the tank cap is properly closed. Before starting engines, ventilate areas where gasoline vapors may have accumulated.

Water reaching the engine's injection system can cause rapid corrosion damage to the precision components in the injection pump components. For this reason, it is vital to check the extra fuel filter regularly for water. Every so often, drain a small quantity of fuel into a suitable container (avoid fuel spillage) and check that there is no condensation water. If there is water in the filter, continue to drain until only clean fuel appears.

The fuel system on the engine is sensitive to air bubbles in the fuel. Always fill the tanks well before they are completely empty. If the system has been run dry, it must be bled before the engine can be started again. See the engine manufacturer's instruction manual before bleeding the fuel system.

⚠ WARNING

- The fuel system grounding is effective only when the boat is in the water and the system is filled using the nozzle. If filling from canisters, only use plastic containers and pay attention to not overfilling the system. Do not top off.
- Never block access to safety equipment, fire extinguishers, fuel valves or main power switches.
- Never block any ventilation openings made in the boat because their purpose is to clear the air of fuel fumes.
- Never use a wrong type of fuel in the heater or cooker as this may damage them.
- Never use an open flame when detecting leaks.

4.2.9.2 Maintaining the fuel system

Follow the engine manufacturer’s maintenance schedule.

- Annually, check the condition of the hoses and make sure that there are no visible cracks, abrasion, or deterioration.
- Replace worn parts with genuine, marine-grade parts only.
- Bi-annually and for winter storage, check the fuel tank compartment for possible accumulated water. Fuel tank compartment can be checked through maintenance hatch at center of boat. Remove possible water.
- Bi-monthly, inspect the fuel system for presence of water in the fuel tank.

  Presence of water in fuel can be checked by inspecting the contents of the fuel filter.

  If any water is found, it must be removed and the whole fuel tank dried before the tank can be refilled with fuel.
- Examine the fuel tank and lines for corrosion and leaks.

4.2.10 Freshwater system

You can choose to equip your boat with an optional freshwater system.

The freshwater system consists of a fresh water tank, pump and filter. The fresh water tank is filled via the filling cap.

© 2026 Axopar Boats

The freshwater system is turned on by switching on the freshwater pump. The system maintains a working pressure automatically, which is why the pump does not need to be shut after use.

- Switch off the system when the boat is left unmanned.
- Check the filter regularly.

Antifreeze is added during production phase of the boat, and the dealer is responsible for disinfecting the freshwater tank before sale.

NOTICE

The water from the system is not meant for drinking.

The freshwater system must be thoroughly emptied for winter storage.

It is not recommended to use any anti-freeze products in the freshwater system.

© 2026 Axopar Boats

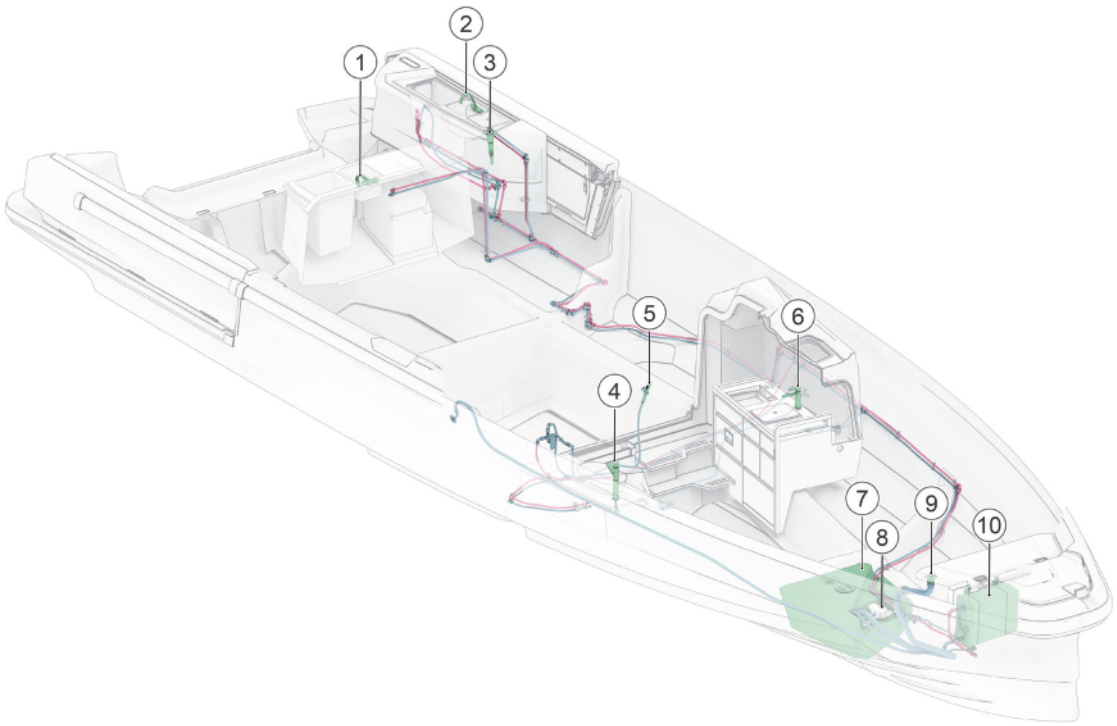

(1) Wet bar tap
(2) Wet bar tap
(3) Deck shower
(4) Toilet tap
(5) Shower
(6) Front cabin pantry tap
(7) Water tank
(8) Water pump
(9) Inlet pipe for water tank
(10) Water heater

© 2026 Axopar Boats

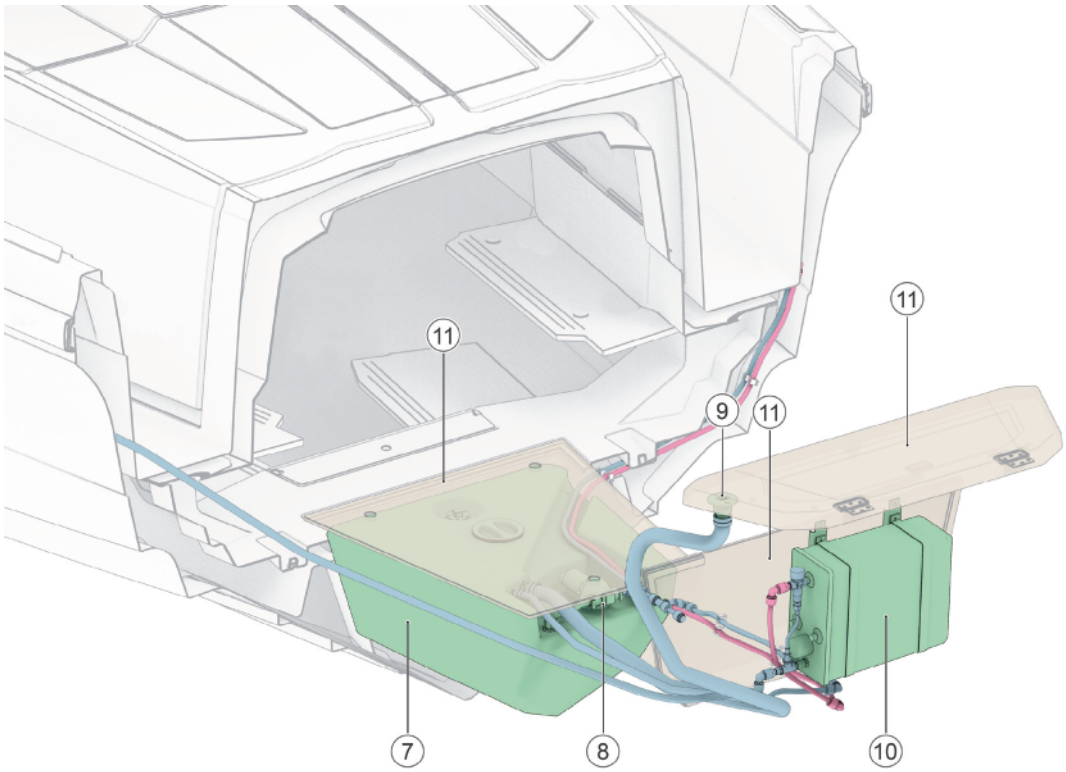

(7) Water tank
(8) Water pump
(9) Inlet pipe for water tank
(10) Water heater
(11) Hatches

© 2026 Axopar Boats

The water pump has also two LEDs indicating the operating status and faults in the pump operation. For more information about the signals, please refer to manufacturer’s manual.

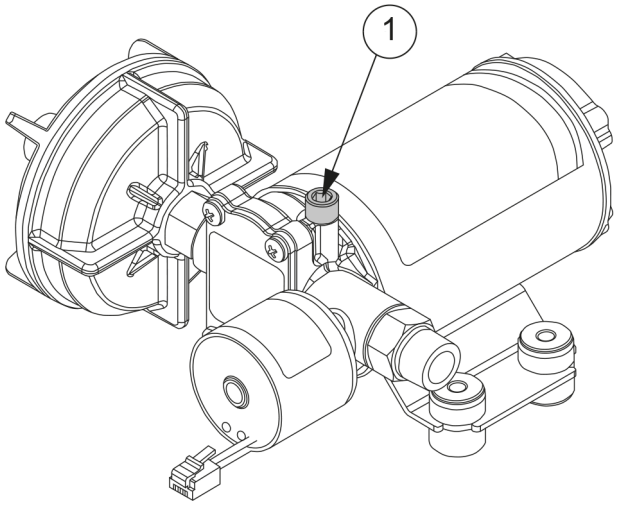

Figure 4.1 Water pump and air release valve

Freshwater system needs to be disinfected and flushed annually or after longer periods of non-use to keep the system in working order.

Disinfection procedure is described below:

1. Flush the entire system thoroughly by running potable water to flow through it.
2. Drain the system completely.
3. Fill the entire system with disinfecting solution and follow the manufacturer’s instructions.
4. Drain the entire system once disinfection process is complete.
5. Flush the entire system thoroughly several more times with potable water.
6. Fill the system with potable water. Freshwater system is now ready to be used.

Maintenance

Annually inspect hose connections, tube fittings and pump electrical wiring connections for proper securing and no chafing. Water pump inlet filter is recommended to be checked and cleaned annually. Running the system regularly helps keep the water pump’s impellers in working order.

4.2.11 Septic system

The boat's septic system consists of the toilet seat, the septic tank and the related systems.

© 2026 Axopar Boats

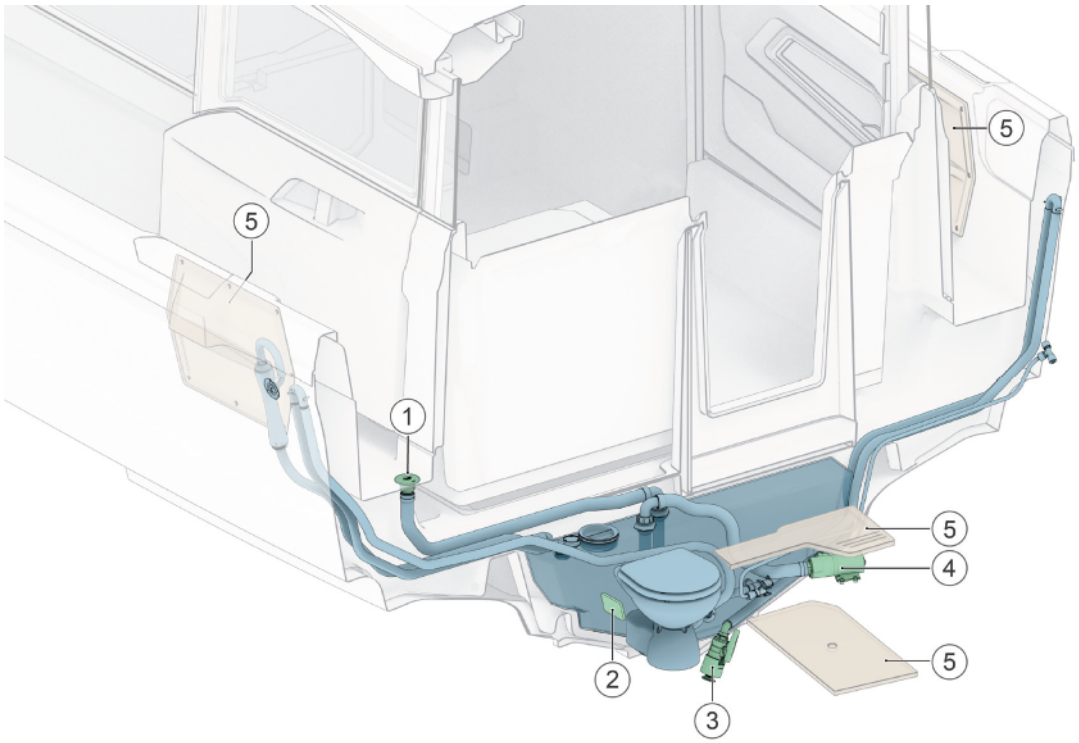

(1) Deck suction fitting
(2) Septic tank
(3) Septic tank outlet
(4) Macerator pump
(5) Maintenance hatches

Maintaining the macerator

The macerator pump can get stuck if it is not used for extended periods of time. Regular use of the macerator helps to prevent this from happening.

If the macerator pump gets stuck, please contact your dealer for repairs.

4.2.11.1 Toilet seat

NOTICE

- Never put any other objects but toilet paper in the toilet.
- In order to avoid damages, you must also not pour hotter than lukewarm water into the toilet.
- It is under no circumstances allowed to flush paper towels, fabric or rubber products, hard objects, oil products or solvents down the toilet.

© 2026 Axopar Boats

Using the electrical toilet

The electrical toilet is used with a separate operating switch. For more information on the device, see the manual for the toilet.

Maintaining the toilet

- Clean the toilet with a mild cleaner.
- Never use cleaning agents or deodorants which contain pine oil, formaldehyde or chlorine, nor corrosive or petroleum-based agents.

  These materials can damage the plastic and rubber parts in the toilet.
- Lubricate the pump shaft with Vaseline to increase the service life of the seal.
- Flush the toilet system thoroughly with fresh water when the boat is not in use.

4.2.11.2 Septic tank

Avoid environmental pollution!

The blackwater tank is fitted with a deck outlet pump using an international standard type connection. Using the pump, the black water can be emptied to a permanent septic tank ashore. These facilities must always be used.

In areas where there are no permanent septic tanks, the macerator is used to evacuate the contents of the tank straight into the water as follows: Open the sealed seacock. If possible, empty the tank daily and always in deep waters far from the shore. For the location of the pump, see the section ***Septic system***.

The shut-off valve must be closed after the evacuation.

Do not allow the tank to become full. It can lead to paper becoming compacted in the bottom of the tank, making it more difficult to empty.

NOTICE

Before the boat is laid-up for winter storage, the whole system must be cleaned and flushed thoroughly while the boat is still in the water.

The whole system must be thoroughly drained of water when the boat is lifted out of the water.

This measure prevents frost damage, bacteria growth and smells.

Use of antifreeze is not recommended, since it is impossible to guarantee that it reaches all parts of the system.

4.2.11.3 Shower sump pump

Regular checks

- Clear the shower sump pump regularly of any accumulated debris and hair.
- Test that the float switch is in working order.

© 2026 Axopar Boats

Before winter storage

- Empty the shower sump pump of water.

4.3 Optional equipment

This section presents the optional equipment and systems available for the boat.

4.3.1 Warmwater system

The boat can be equipped with the warmwater system as an option.

The warmwater system consists of a water boiler and associated hardware.

The water boiler is located in the bow of the boat. It can be reached by removing front panel inside bow cabin.

To reach the boiler, unscrew the screws in the service hatch.

Switch on the water boiler from the switchboard located in the bow storage box.

- Switch on the freshwater pump before switching on the water boiler.
- Operating the water heater empty damages the system.

Adjust the water temperature by rotating the thermostat dial mounted on the boiler.

⚠ WARNING Water might reach scalding temperature if the thermostat is set to high setting (above 5).

For more information on the thermostat adjustment, see the manufacturer’s manual.

Maintenance

See the manufacturer's manual for maintenance instructions for the water boiler. Inspect the boiler's hose connections regularly for signs of leaks.

4.3.2 Wet bar in port fender box

You can choose to equip your boat with an optional wet bar in fender box. The wet bar is in the boat's port side fender box.

Wet bar is equipped with a faucet, sink, and a cooled compartment. The fresh water in the wet bar is either cold or cold/warm water depending on whether warmwater system is installed or not.
The cooling unit for the cooled compartment is located towards the bow from the fender box.
The shut-off valve for the sink drain can be accessed via the round inspection hole at the bottom of the cooled compartment.

You may choose to equip your boat with an external gas grill. The gas grill option comes with rail mounts, storage bag, and a gas grill. Combining this option with the wet bar in fender box option allows you to create a cooking area in the aft of the boat.

© 2026 Axopar Boats

Maintenance

- Inspect the faucet for leaks or drips.
- Clean the sink and faucet with a mild detergent, avoiding abrasive materials that could scratch the surface.
- Drain and flush the water system to prevent any buildup of sediments or bacteria.
- Check the cooled storage box for consistent temperature and operational efficiency. Clean the interior with a soft cloth and a solution of baking soda and water to eliminate odors and stains.
- Annually ensure all connections, including water supply lines and drain pipes, are secure and free of corrosion.

4.3.3 Heating system

The boat can be equipped with a heating system as an optional equipment.

The heater unit is located at port side of boat. Heater can be accessed by opening access hatch. Hatch is located on the side wall, aft of the wheelhouse.

In addition, there are a different number of heating vents available, depending on the boat's equipment.

The operation panel is located in the steering console.

Fuel tank for heater is at starboard side, aft of the boat. Fuel fill for heater is located under fender box hatch.

⚠ WARNING

Appliances that burn fuel, consume oxygen and discharge toxic combustion products into the boat.

Good ventilation is essential when such an appliance is in use. Open ventilation holes and make sure that they are not blocked and that air flows freely through them.

- Never leave the boat unattended when the heater is in use.

NOTICE

Heater components may break if the wrong kind of fuel is used. For more information, see the manufacturer’s manual.

- Do not switch off the heater’s direct supply current before you have made sure that the appliance has cooled down.

4.3.4 Air conditioning

The boat can be equipped with a 230V/110V air conditioning (AC) as an optional system. Depending on the selected setup, the air conditioning allows climate control in the main cabin, the front cabin, and the aft cabin.

The optional air conditioning system consists of an air conditioning unit, a water pump, a strainer, a water intake valve and a ducting arrangement.

The air conditioning is controlled by control panel display located in the front cabin. When you set the desired temperature from the control panel displays, the unit automatically activates when the ambient temperature goes over or under the set value.

© 2026 Axopar Boats

Before starting the unit:

- Ensure the sea water intake valve and the sea water outlet valves are open. The location of the valves is presented in the section **Openings in the hull and deck**.
- Ensure that the air conditioning circuit breaker is switched on.

NOTICE Running the air conditioning unit when the water intake valve is shut can cause the unit to overheat and get damaged.

Maintenance

- Check and clean the air filter near the air conditioning unit monthly.
- Inspect the sea water circuit regularly for leaks.
- Inspect the electrical wiring and electrical connections annually for corrosion and firm seating.
- Coolant refills should be performed by a certified service provider.

Refer to the supplier's manual for complete operations, maintenance, and warranty instructions. In case of the air conditioning unit fails, please contact your boat dealer.

4.3.5 Navigation system

Your boat can be equipped with multifunction displays (MFD).

Depending on the boat configuration, the boat is equipped with single or multiple screens.

The multifunction display can be used to show electronic charts, plot courses, and navigate the boat. It also acts as interface for marine electronics and other digitally enabled equipment on board.

Refer to the supplier's manuals for complete user instructions and maintenance instructions of these functionalities and equipment.

4.3.5.1 VHF equipment

VHF radio allows instant communication between your boat and other boats, marinas, bridges, and maritime authorities.

The VHF radio is the recommended means of communication on the coastal waters, and it transmits messages on high frequency waves. The VHF system consists of a VHF radio unit near the drivers position and a radio antenna located either on the mast or on the roof of the boat depending on the boat model.

Study the provided booklet for the local regulations and the functionalities related to the use of the VHF system.

For your safety, make sure the VHF system is operational before going out to open sea.

© 2026 Axopar Boats

4.3.5.2 Radar

Use the radar in poor visibility conditions, such as fog, rain, or darkness. The radar helps to identify shorelines, fixed obstacles, and other vessels, and to assess their distance and bearing. Effective use of the radar requires that the operator is familiar with the device's operation and settings in order to interpret observations correctly.

For safety reasons, it is important to remember that the radar is an aid and does not replace visual observations or good seamanship. The radar display should be monitored regularly; however, a continuous lookout must also be maintained.

4.3.6 Bow thruster

The bow thruster enhances the maneuverability of the bow when docking or performing other maneuvers that require increased operator control.

The bow thruster is powered by the Aux battery.

The batteries must be disconnected from the electronic circuit before changing a fuse. For more information, see the manufacturer's manual.

⚠ WARNING

Incorrect use may cause overheating and short circuiting, and pose a fire risk.

- Use the bow thruster for only short periods at a time.
- Do not exceed four duty cycles (max. 30 seconds long in 25 mins).

If overloading occurs, contact a qualified marine electrician.

⚠ WARNING

Do not touch the bow thruster or its fuse if the Aux main switch is switched on.

⚠ DANGER

Pinching hazard

Never put your hand or any other body part near a windlass or bow roller in operation.

4.3.7 Anchor windlass

The boat can be equipped with bow windlass.

Operation

To operate the windlass, windlass breaker must be switched on.

Windlass is operated with a momentary switch. Pushing the up button will raise the anchor and pushing the down button will lower the anchor.

If there is a loss of power to the windlass, check the windlass breaker to see if it needs to be reset. If the breaker keeps tripping after it has been reset, the anchor windlass system is recommended to be inspected by a qualified electrician.

The anchor windlasses are powered by the Aux battery. The battery and its fuse are located in the bow of the boat.

© 2026 Axopar Boats

⚠ WARNING

- Do not touch the anchor windlass or its fuse if the main switch Aux is switched on.
- Even if the current is switched off, do not change the windlass fuse. The high current may cause a fatal electric shock.

Manual operation

In case of loss of power, the windlass can be manually operated by disengaging the clutch. Please refer to the manufacturer's manual how to operate the windlass manually.

Before using the anchor windlass

Always check that:

- The windlass is in working order.
- The anchor chain can move freely.
- The anchor and the chain cannot damage the boat when lowered.
- The anchor and anchor chain cannot hit any person.

For more information, see the manufacturer's manual.

While under way

The anchor windlass must be fixed mechanically to prevent it from coming loose when the boat is moving. For more information, see the manufacturer's manual.

⚠ WARNING

Pinching hazard

Never put your hand or any other body part near a windlass or bow roller in operation.

⚠ WARNING

If the windlass loosens when the boat is moving at great speed, it may cause great damage to the boat, its passengers and outsiders.

- Always fix the anchor windlass mechanically in place before getting under way.

⚠ WARNING

Keep all body parts and clothing away from an activated windlass.

NOTICE

Do not use the windlass to pull or tow another vessel.

Maintenance

Salt deposit accumulating on the windlass should be washed away with fresh water regularly to prevent corrosion. For more information, please refer to the manufacturer's manual.

© 2026 Axopar Boats

4.3.8 LPG system

The boat can be equipped with an LPG system for a cooker as an optional extra. The system is tested and approved before delivery.

The system consists of a cooker(s) and gas cylinder. The apparatus is equipped with a shut-off valve (in connection with the cooker) and a decompression valve. A ventilation hole is provided on the outside of the hull in the space where the gas cylinder is installed. A fire blanket must be installed right next to the cooker.

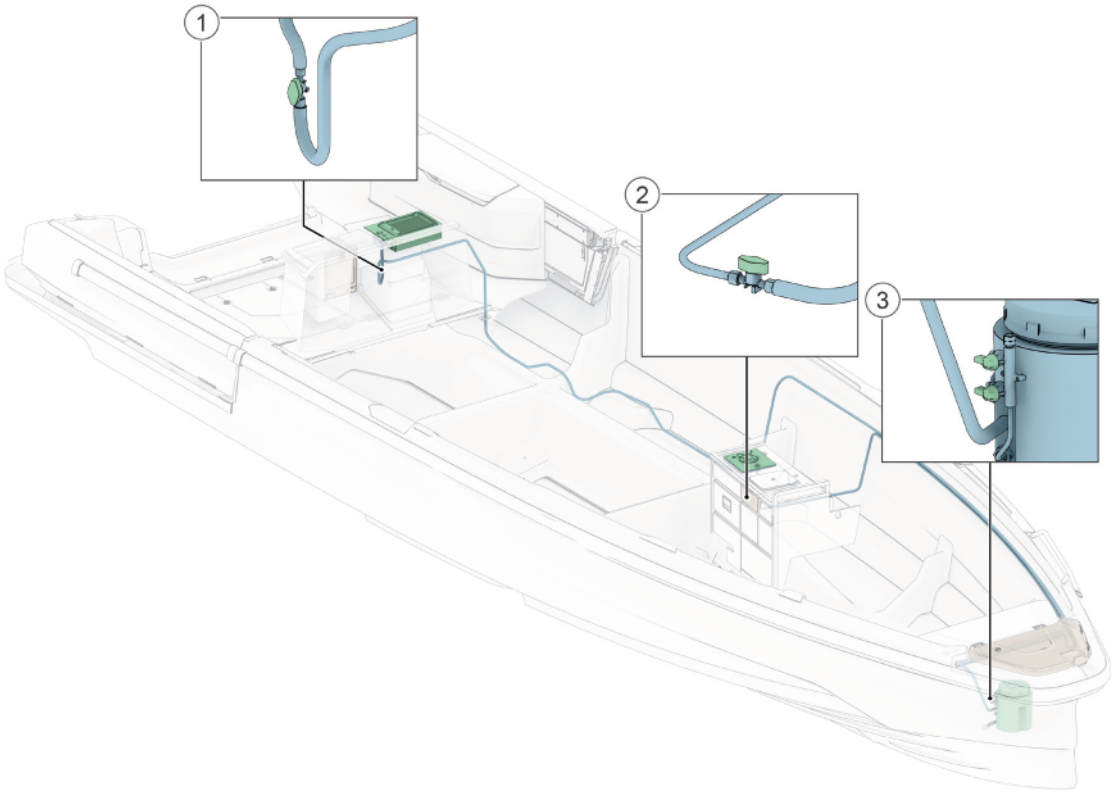

(1) Cooker, appliance shut off valve
(2) Cooker, appliance shut off valve
(3) Gas cylinder, main shut off valve

Fuels that produce a naked flame consume oxygen and discharge combustion products into the boat. Good ventilation is therefore essential when an appliance is in use. If cooker is installed inside cabin, ensure good ventilation and keep doors open.

LPG cylinder housing shall not be used for storage of any other equipment.

© 2026 Axopar Boats

⚠ WARNING

When installed inside, fuel burning open flame appliances consume cabin oxygen and release products of combustion into the craft; do not use the stove for space heating. Ventilation is required when appliances are in use. Never obstruct any ventilation openings. The ventilation requirements have been calculated to suit the LPG appliances as installed.

- Before opening the valve to the gas container, make sure that the appliance valves are properly closed.
- Store the fire blanket in the required location.

4.3.8.1 Using the LPG cooker

Follow these instructions to safely use the LPG cooker.

Ventilation

Appliances which burn fuel consume oxygen and discharge combustion products into the boat. Good ventilation is essential when an appliance is in use.

- Never use the LPG cooker for heating the boat.
- Never cover the ventilation openings.

Lightning the LPG cooker

1. Ignite the burner by pushing the knob down. Then turn the gas knob to its maximum position, listen for the gas flow, and hold the knob down.
2. Light the flame by lighting the burner with a match, lighter, or built-in ignition system. Keep pushing the knob for 10 seconds. If released earlier, flame sensor might shut down gas.
3. Adjust the flame by turning the knob to the desired size.
4. Turn off the LPG cooker by turning the knob back to its original, off position to stop the gas.

Always read the manufacturer's operating instructions for your specific cooker model.

Use pots and pans that are the appropriate size for the burner to prevent spillage and ensure efficient heat use. Keep combustible material like plastic containers and dry ingredients away from cooker. Clean the cooker after use.

Valves

- Close the valves on the supply pipes and the container valve when the appliance is not in use.
- Close the valves before refuelling and immediately in an emergency.
- Check that the appliance valves are closed before opening the container valve.
- Keep the valves of empty cylinders closed and disconnected.
- Fit the protective covers, caps or plugs.
- Store spare or empty cylinders on the open deck or in drained areas designed for the purpose.

Replace the regulating valve every 10 years.

The valve contains a thin rubber diaphragm which eventually dries out or swells up. If the diaphragm breaks, gas can escape from the cylinder with full pressure into the system, thus causing a fire.

© 2026 Axopar Boats

Inspections

System has pressure gauge installed to LPG cylinder connection. LPG system shall be checked for leakage before each use.

- Close appliance valve.
- Open LPG cylinder valve.
- Allow indicated gauge pressure to stabilize.
- Close LPG cylinder valve, and observe pressure gauge reading for 3 min.
- Pressure gauge reading should remain constant if no leak in the LPG system is present.
- Gauge does not provide an indication of liquid LPG remaining in the cylinder, only its vapor pressure, which is a constant at any given temperature.

If LPG leakage is detected or suspected, the following action shall be taken immediately.

- Shut off the LPG supply at the main supply valve.
- Extinguish naked flames and other ignition sources (heaters, cooking appliances etc.).
- Do not operate electric switches.
- Evacuate the area if possible.

Inspect the hoses and pipes in the system regularly, at least once a year.

- Replace parts if there is any deterioration or damage.
- Replace the LPG hoses outside the cabin every second year, and the LPG hoses inside the cabin every 3 to 5 years.
- Check the flue ducts at least once a year.
  - Replace the flue ducts if there is any deterioration or damage.
- Check the connection gaskets for the regulating valve always when containers are replaced, and replace the connection gaskets annually.

⚠ WARNING

- Never use an open flame when detecting leaks.
- Do not use solutions that contain ammonia for manual leak testing.
- Never smoke or use open flames when a gas container is being replaced.
- If a leak is detected, shut off the main LPG supply valve and do not use LPG appliances.
- Do not use an installation that has leaked until it has been inspected and repaired by a competent person.

Maintenance

For the LPG cooker maintenance schedule and instructions, see the manufacturer's manual.

© 2026 Axopar Boats

⚠ WARNING

- Keep the LPG container in a space designed for it.
- Never leave the boat unattended when LPG appliances are in use.
- Do not smoke or use open flame when replacing LPG cylinders. Close cylinder valves on empty cylinders before disconnecting for replacement.
- Do not modify the craft's LPG system. Installation, alterations and maintenance shall be performed by a competent person. Have the system inspected at regular intervals or as required by national requirements.

- Make sure that you always have free and rapid access to the LPG system.
- The ambient temperature for LPG systems is –20 - +60°C.

NOTICE

Never use a wrong type of fuel in the cooker as this may damage the cooker.

4.3.9 Solar panel trickle charger

The boat can be equipped with solar panel trickle charging system. The system allows you to maintain and slowly charge the batteries on the boat.

The solar panel is located on the bow end of the roof. The trickle charging system includes a charge controller, preventing battery overcharge. The charge controller is installed in the battery compartment wall to the aft of the wheelhouse, at the port side.

Maintenance

Ensure that the solar panel is mounted properly. Check for any dirt, debris, and corrosion on the panel. Periodically clean the solar panel with water.

Do not use chemicals, as they can damage the panel.

4.3.10 Lithium house bank

The boat can be equipped with optional lithium house bank. The house bank is integrated with the boat's electrical circuit, providing electrical power for AC devices when shore power is unavailable, such as when you are out on the sea. The system includes lithium house bank, inverters, battery chargers, and battery management system (BMS) in one package.

The lithium house bank is in the centerline deck recess of the boat. The house bank manual main switch is located next to the power bank, and remote battery switch is located next to the remote switch panel.

The house bank is charged by the engines, optional solar power trickle charger, and shore power.

Maintenance

To maintain the house bank's efficiency, regularly check connections for corrosion or wear. Never open the lithium house batteries. Ensure the area around the house bank is well-ventilated to dissipate heat

© 2026 Axopar Boats

effectively. For long term storage, please see the manufacturer's manual for storage temperature and charge level.

Operation

Operating the house bank is straightforward. Switch on the house bank manual and remote main switches to switch on the house bank and to activate the inverter, which will convert the stored DC power into AC for your appliances. Monitor the BMS for real-time battery status and to manage power consumption effectively. The house bank is equipped with a transfer switch, which allows the current to by-pass the power bank when the boat is connected to shore power.

If the lithium house bank option is selected, the advanced main switch is mainly controlling the engine main switches. The switched 12V distribution has a separate main switch inside the battery box. The separate main switch can be remotely operated from the helm as well.

⚠ WARNING Do not store wet items on top of the house bank.

⚠ WARNING Do not attempt to charge or use a damaged battery.

4.3.11 Roof racks

The boat can be equipped with roof racks.

Roof racks allow for transportation of bulkier objects such as kayaks or bicycles. Objects put on the roof racks must be secured tight to prevent them from falling off or damaging the boat's roof or other components.

Load limit of roof racks is 25 kg / 55 lbs per roof half. Max. load of roof racks is 50 kg / 110 lbs.

4.3.12 Searchlight

The boat can be equipped with an optional searchlight. The searchlight can be mounted on the light mast or directly on the roof depending on the boat model. The searchlight is remote-controlled and rotates 360 degrees, allowing you to illuminate objects in any direction.

The searchlight has one-touch auto sweep and S.O.S.

The searchlight has a 30-minute shut-down timer. If the searchlight is left unattended for more than 30 minutes, the searchlight turns itself off.

4.3.13 Sunshades

The boat can be equipped with canvas sunshades to provide shade in the aft and bow of the boat.

© 2026 Axopar Boats

The sunshades are only for stationary use and must be stowed away before the boat is driven.

Depending on the boat model, the sunshade poles are stored in spring clips on top of the roof or inside a hatch.

Setting up a sunshade

1. String the loops of the sunshade to the ends of the support poles.
2. Mount the support poles on the gunwale sockets.
3. Connect the canvas clasps to the D-rings on the roof.
4. Adjust the tightness of the sunshade so that it's tight.

4.3.14 Axopar connectivity

Axopar Connect app and Axopar Connectivity hardware is available as an option on your boat.

This option provides remote monitoring capability and recording of boat usage as trip logs.

Data sources used for the remote monitoring functionality are the dedicated GPS receiver connected to the Axopar Connectivity hardware and the sensor data from the boats NMEA 2000 network (i.e. engine data).

The system also monitors the operation of the bilge pumps and alerts the user if bilge pump is activated either automatically or manually while underway or when the boat is docked.

System will also alert in case bilge pump runs for an extended period and a certain time threshold has been exceeded.

Notifications for the bilge pump operation are saved in the mobile app's notifications section.

Your boat may have ability to remotely control service battery bank main switch, deck lights and fridges.

4.3.15 Activity platforms

Activity platforms may be used to multiple water activities. Platforms are lowered and raised manually. Open aft and forward latches, then push lock button to release platform.

After raising platform, secure latches before driving the boat.

© 2026 Axopar Boats

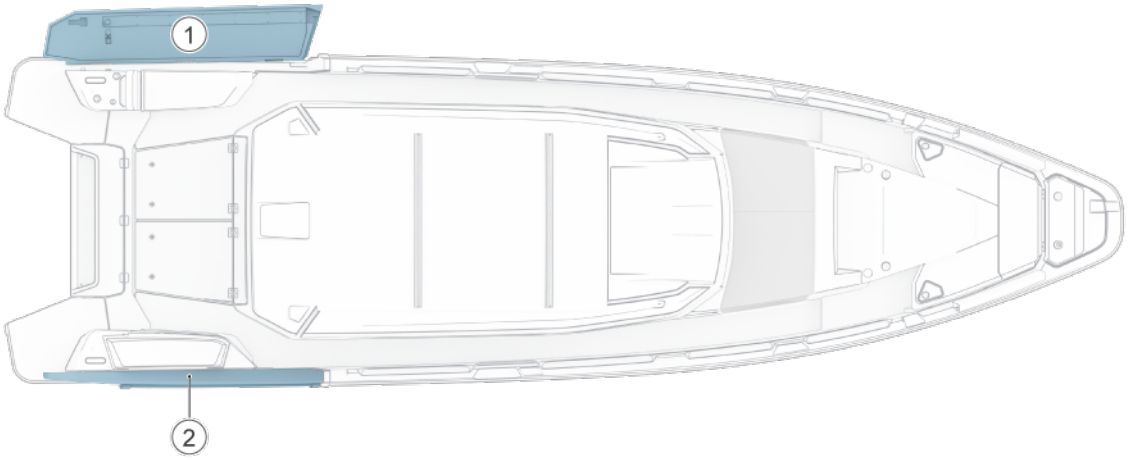

(1) Opened activity platform
(2) Closed activity platform

⚠ WARNING Raise platforms and secure latches always when on the way.

4.3.16 Engine frame

The boat can be equipped with an engine frame.

Engine frame protects engines and gives crew support when moving at aft deck. Engine frame is not to be used to tow waterskier or water toys.

© 2026 Axopar Boats

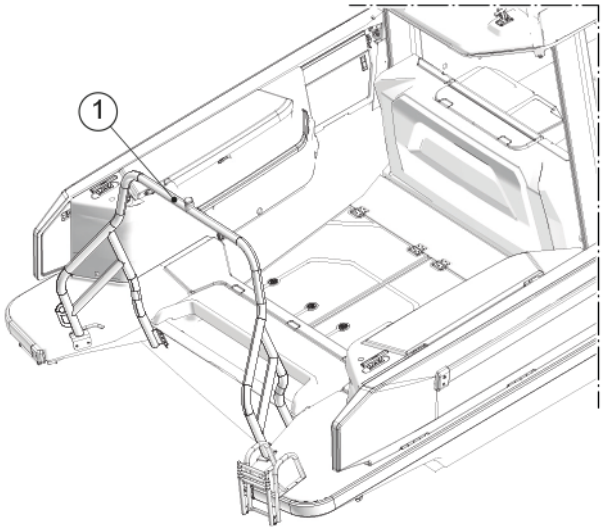

(1) Engine frame

If engine frame is installed with tow point, it may be used to tow waterskier (not available in US).

© 2026 Axopar Boats

5 Transportation

5.1 Lifting the boat

Lift the boat only with a lifting beam and lifting straps. Use the specified locations for the lifting straps.

Commission only a reputable lifting company or a boat yard with sufficient lifting capacity to lift the boat. Make sure the company has full insurance cover, in case of any damages.

⚠ DANGER

Risk of serious injury or death by falling load.

- Do not stay under the boat when it is hanging in the crane.

Lift straps may slip on the hull. When appropriate, tie the straps together before lifting.

The position of the straps may need to be adjusted depending on how the boat is loaded.

In addition to the boat's own weight, take into account the equipment and other possible loads in the boat.

⚠ CAUTION

Note the location of the log transducer to avoid damaging it.

- Protect the hull sides well to avoid damages.

The lifting beam must be exactly the same width as the boat. Always take great precautions near and around the boat when lifting.

⚠ CAUTION

Risk of damage to the hull.

Do not lift the boat with a forklift.

The location of the lift straps is indicated in the figure.

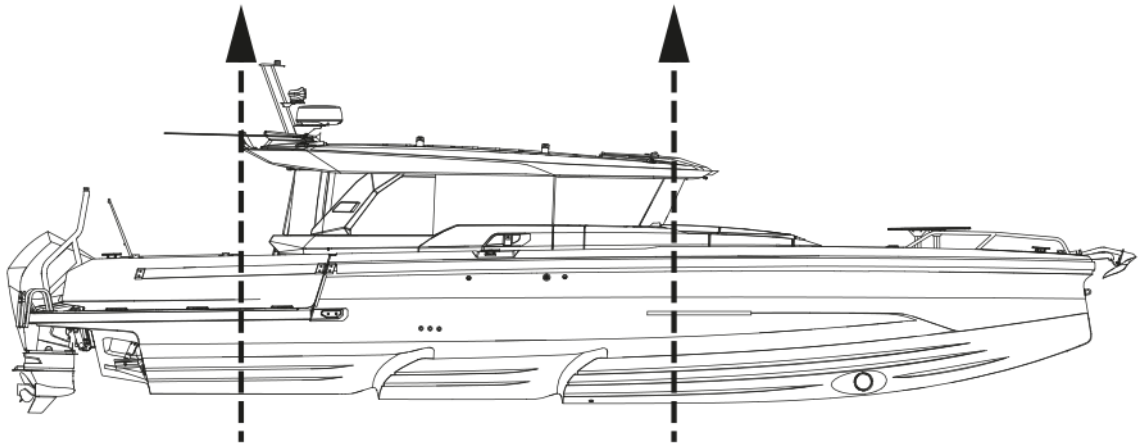

© 2026 Axopar Boats

Before operating any lifting equipment:

- Check and determine applicability of federal, state, or local requirements.
- Follow the lift equipment manufacturer’s requirements and recommendations.
- Check the boat's lift points, weight and other information.
- Straddle lift operation is a highly technical area that requires trained and experienced operators.

During lifting:

- Check the boat for bilge water before lifting.

  Excessive quantities of bilge water can shift, changing the balance of the load.
- Check for thru-hull appendages such as knot meters and stabilizers, rub, spray, and splash rails, so that they are not damaged by the lifting equipment.
- Check the hull structure to locate shafts, rudders, struts, and the forward and aft ends of any keels.
- Check the hull’s structural configuration, including the location of bulkheads, stringers, engines, and tanks.
- Check bilges for water ingress following launch.
- Transport the boat as close to the ground as practicable.

5.2 Transporting and storing the boat

Before lifting the boat onto the trailer, make sure that the trailer is suitable for the boat.

Make sure that there is a sufficient number of supports to distribute the weight properly without excessive point loads, and the capacity and dimensions of the trailer are sufficient to carry the boat and its engines, equipment, battery, boating accessories and fuel on board. Pay special attention to exposed areas and edges of hull, such as spray rails and steps in the hull, during loading, deloading and transportation.

⚠ WARNING

A boat trailer that does not have sufficient capacity or that is poorly maintained can become damaged and cause a danger on the road.

- Make sure that the trailer capacity is sufficient to also carry the weight of the engines, fuel and equipment.

⚠ CAUTION

The hull of the boat can be damaged if there is an insufficient amount of supports on the trailer or during the storage.

The trailer must be a little nose heavy. Make sure that the boat is securely fastened to the trailer, that it cannot move into any direction, and that the side supports provide an even support for the weight of the boat.

Before loading the boat on the trailer:

- Remove any unnecessary weight from the boat.
- Drain the bilge water.
- Adjust the side supports of the trailer so that the most weight rests on the keel supports, and the side supports only offer lateral support.

© 2026 Axopar Boats

- Protect the boat by placing suitable padding between the tie down straps and the boat, if necessary.
- See the engines manual for any instructions on trailering.
- Make sure that the doors and hatches are properly closed.
- Pay attention to any equipment and accessories in the boat during trailering.
    - Make sure you secure all loose items in the boat.
    - Do not use a hood, canopy, tonneau cover or other similar top or cover on the boat during trailering.

      These hoods and covers can become detached at high speeds and damage the boat and cause a danger to traffic.

      A hood or other cover flapping in the wind during trailering can damage the boat surface.
    - Keep the hood in its dedicated storage compartment during trailering, or remove the hood completely, if necessary.

Boat storing

- Make sure that the bow is slightly elevated when in storage, to help potential water escape the deck.
- Make sure the boat is steadily positioned and secured. The weight of the boat needs to rest on the keel.
- Protect the areas of the hull and deck being supported with some form of padding.
- Keep the engines in a downward position.

© 2026 Axopar Boats

6 Operation

The boat owner must take local and international regulations into consideration concerning the boat crew, equipment and handling of the boat. In some countries, a driving license or a separate authorization is required for driving the boat. Special regulations may also apply.

Ensure that the anticipated wind and wave conditions do not exceed the design category of the boat, and that the crew is able to handle the boat in these conditions. Even though the boat is designed for such conditions, they can still be very dangerous. Only a capable, fit and trained crew, using a well maintained boat, can satisfactorily operate in such conditions.

If the boat is fitted with a life raft, carefully read its operation manual. Onboard, the boat must have the appropriate safety equipment according to the boat type and weather conditions. This equipment is compulsory in some countries. The crew must be familiar with the use of all safety equipment and the most important actions in different emergency situations. Sailing schools and clubs regularly organize rescue drills.

The equipment in the boat may differ from the equipment used in the figures in this manual. This might be due to any optional equipment chosen or modifications made after producing this manual. In such cases, contact your local dealer for the operation instructions and additional information regarding the operation of the equipment in question.

Always maintain the boat properly and make allowance for the deterioration that occurs over time and as a result of heavy use or misuse of the boat. Any boat, no matter how strong it may be, can be severely damaged if not used properly. Inappropriate use of this boat not compatible with safe boating is not allowed. It is always important to adjust the handling of the boat to the sea conditions and own boating experience. The gelcoat parts, especially the colored parts, need to be polished and waxed approximately every fourth months to prevent the parts from fading or getting other visual defects.

6.1 Handling devices

6.1.1 Steering console

The controllers are situated so that the driver can easily manage them from the steering console.

The location and quantity of the devices depend on what optional equipment and engine models have been chosen. See the device manuals for further information on the devices.

© 2026 Axopar Boats

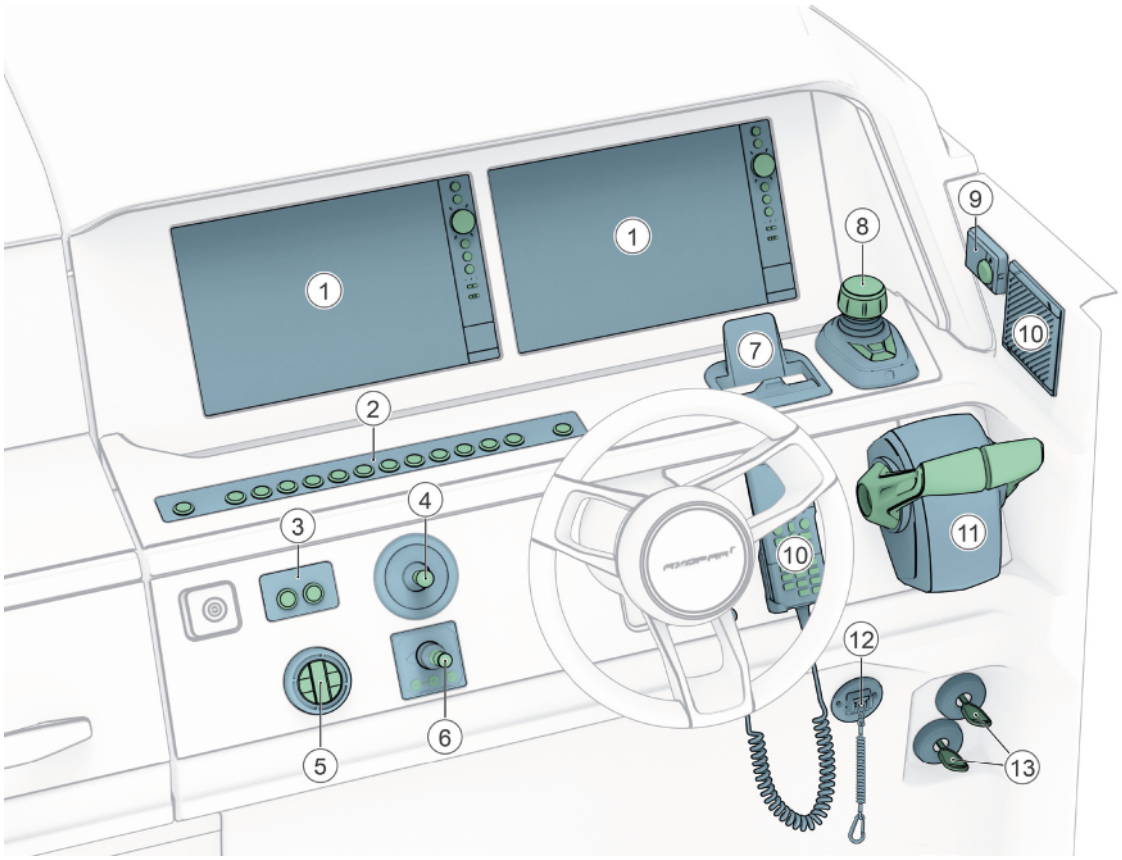

(1) Optional chart plotter
(2) Steering console switch panel
(3) Wiper control switch panel
(4) Trim tabs control unit
(5) Optional audio remote
(6) Optional bow thruster control panel
(7) Phone charger
(8) Optional joystick piloting system
(9) Heater control unit
(10) Optional VHF radio
(11) Engine remote control
(12) Emergency stop
(13) Ignition keys

6.1.2 Windscreen wipers

The boat’s windscreen wipers are controlled by the switches in the boat’s steering console.

A switch for the windscreen washer is installed next to the switch for the windscreen wipers.

© 2026 Axopar Boats

6.1.3 Steering system

The steering system is one of the most vital systems related to safe boating.

The boats are equipped with a hydraulic assisted power steering or electric assisted power steering. Please refer to the collateral manuals provided by the outboard engine and steering system manufacturer included in the manual package provided with the boat.

The power steering system includes a steering pump to help with the handling of the vessel.

Electrical steering system includes electrical actuator, cables and electric control.

6.1.3.1 Checking and topping up oil

Effective and properly working steering is crucial for the safety of the boat.

- Check the oil level in the pump before casting off.
- For detailed instructions and the steering system oil recommendation, see the manufacturer's documentation.

6.1.3.2 Steering maintenance

For the regular maintenance of the steering system components, please refer to supplier’s manual.

If you encounter issues beyond regular maintenance needs, please contact your boat dealer immediately for service.

6.1.3.3 Steering console switch panel

Here you can see details on the steering console switch panel.

© 2026 Axopar Boats

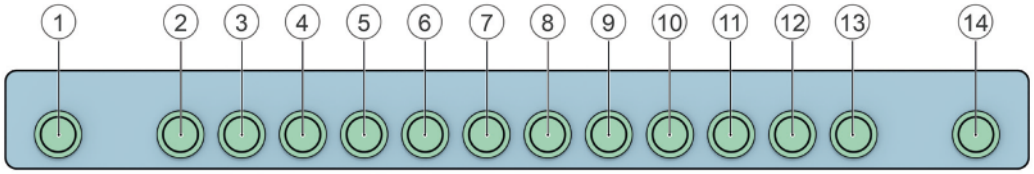

(1) Horn
(2) Navigation lights
(3) Anchor light
(4) Bilge pump forward
(5) Bilge pump aft
(6) Helm lights
(7) Deck lights
(8) Spot lights
(9) Ambient lights
(10) Night lights
(11) Underwater lights
(12) Panel lights
(13) AUX
(14) Navigation ON - OFF

Alternatively, your boat may be equipped with a panel with fewer switches.

© 2026 Axopar Boats

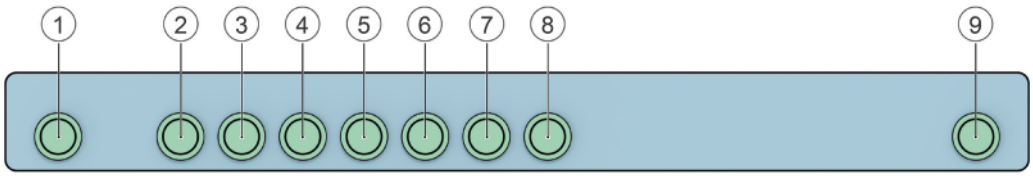

(1) Horn
(2) Navigation lights
(3) Anchor light
(4) Bilge pump forward
(5) Bilge pump aft
(6) Helm lights
(7) Panel lights
(8) AUX
(9) Navigation ON - OFF

6.1.4 Starting the engine

See the engine manufacturer’s manual for engine information.

1. Set the engine lever in neutral.
2. Turn the ignition on and check the fuel level.
3. Start the engine by turning the ignition key.
4. Check that the gauges for oil pressure and voltmeter show normal values.
5. Run the engine to operating temperature at idling speed. Never rev up a cold engine.

⚠ DANGER

Risk of carbon monoxide poisoning.

Be aware of the risks with engine exhausts. For example, under turbulence or disadvantageous wind conditions, exhaust can enter the boat. If this happens, avoid idling the engines. If these problems occur under way, do not open the hatches and ventilators, as it can worsen the problems. Instead, you may try solving the problems by changing the boat’s speed or weight distribution.

⚠ WARNING

Never step onto the swim ladder when the engine is running. Stop the engine while the steering and propeller are being inspected.

⚠ WARNING

Do not operate this boat with an engine that exceeds the maximum engine power recommended by the manufacturer.

© 2026 Axopar Boats

6.1.5 Joystick piloting

Your boat may be equipped with a joystick piloting (JPO) system. This system allows you to intuitively control the vessel at slow speeds with the joystick located in the helm area.

Operating the boat with the joystick is well suited for close quarter operations and when docking. The JPO system is ready to be used when the engine remote control levers are both in neutral position and the indicator light around the joystick turns green.

The joystick gives three axis control: fore and aft, port and starboard, and rotational, or any combination thereof. Moving the the joystick to starboard causes the boat to move sideways to starboard. Rotating the joystick causes the boat to rotate around its center. The joystick is proportional, which means that the further the joystick is moved from the center, the more thrust is applied into that direction.

The JPO system also comes with autopilot modes such as Skyhook, auto heading, and route mode (waypoint sequencing).

Please read the manufacturers user manual thoroughly before using any features of the joystick piloting system.

⚠ CAUTION Factors such as wind, water conditions, thruster battery voltage (if equipped), and boat loading may degrade the accuracy and response of the JPO system.

⚠ WARNING Avoid serious injury or death.

Even when engaging autopilot features of the JPO system, the operator must always stay at the helm. The JPO systems autopiloting features does not respond to hazards, obstacles, or swimmers in the vicinity of the boat.

⚠ DANGER Before activating autopilot features such as Skyhook, auto heading or route mode, check that no one is in the water and tell passengers not to enter the water. Stop the engines immediately whenever someone is in the water near the boat.

6.1.6 Throttle lever

The engine throttle and shift are controlled by the electronic throttle lever. To start the engine, the lever must be in the neutral position. The throttle lever is used to control the engine's RPM which affects the speed of the boat.

Moving the lever forward shifts engine into the forward gear, and moving the lever backwards shifts the engine into the reverse gear. Progressively moving the lever in one direction will increase the speed of the boat in that same direction.

For detailed guidelines about safe boating and component maintenance, please refer to the provided outboard engine literature. If you encounter issues beyond regular maintenance needs, or if noticeable failures occur, please contact your boat dealer immediately for service.

⚠ WARNING Always make sure no one is close to the propeller when starting the engine or engaging the propeller! Acknowledge the information provided on the helm's warning labels.

© 2026 Axopar Boats

6.1.6.1 Trim and tilt

The engine can be raised or lowered with the trim controls in the throttle lever.

Raising and lowering the engine is needed when trailering or launching the boat. Adjusting the trim angle of the engine also allows optimizing the run angle for the boat to achieve optimal performance or fuel efficiency.

When raising the engine(s) all the way, make sure the engines are facing straight aft, and no optional equipment such as foldable seats or aft deck gates are in the way.

Refer to the supplier’s manuals for detailed operation instructions, maintenance, and warranty information.

⚠ WARNING Raising the engines out of the water without paying attention to surrounding equipment such as aft deck gates, foldable seats or engine frame may cause damage to the engines.

6.2 Swivel seat - Driver and passenger seats

The driver and passenger seats are operated with locking handles.

⚠ DANGER The locking handles must be in the locked position before the boat speed exceed 5 knots.

© 2026 Axopar Boats

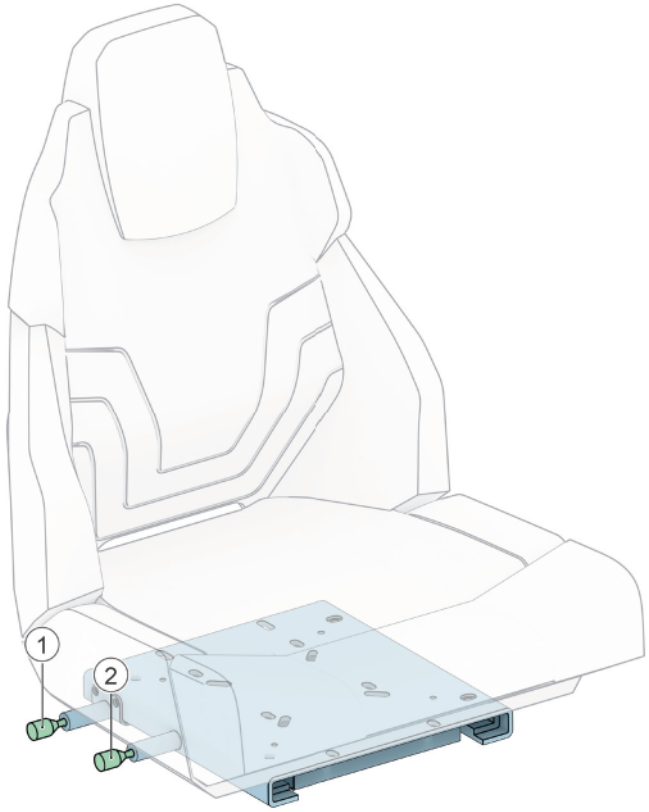

(1) Rotation locking handle
(2) Moving locking handle

- For the rotating function, press the locking handle down to release the lock.
  This allows you to rotate the seat on the post.
- For the moving function, lift the locking handle up to release the lock.
  This allows you to move seat from back to front.

6.3 Inspecting the boat

Due to safety reasons, the below listed inspections must be carried out before and after using the boat.

6.3.1 Checklist: Regular inspection before leaving harbor

Safety

Make sure that:

- All the people onboard have life jackets.
- The wind and wave conditions do not exceed the design category of the boat.
- The emergency stop lanyard is attached to driver.

© 2026 Axopar Boats

- There is a fire extinguisher (or several) onboard and their approval/inspection date has not expired.
- The needed ropes and anchor are onboard.

Draining and tightness

Check that:

- There is no water in the bilge.
- All the bilge pumps are functional.
- The bilge has no signs of fuel or oil leaks.
- All deck hatches are tightly closed.

Electrical and engine

Check that:

- All the fuses are intact.
- The main switches are switched on.
- The batteries have enough power.
- The engine works properly.
- The engine cooling water flows as expected.
- The fuel level is sufficient.

⚠ WARNING The specified tank capacity is not necessarily fully available, depending on the trim and load on board. The tank must always be kept at least 20% full.

6.3.2 Checklist: After using the boat

Make sure that:

- The main switches are switched off.
- The septic tank discharge valve is closed.
- There is no water in the bilge.
- The bilge pumps are functional.
- The deck draining works properly and all the draining valves are open.
- All deck hatches, roof canvas and doors are tightly closed.

6.3.3 Checklist: After grounding

If the boat hits a rock, the damage may be easily visible or hidden.

- Make sure that everyone on board is wearing a life jacket.
- Check that everyone on board is up on the deck.
- If necessary, make an emergency call or use a distress signaling device.
- Immediately after a capsize, check the bilge for leaks. Even if the bilge pump is not rated for leaks, you may try to empty the boat using it.

© 2026 Axopar Boats

- Stop the engines and lift them out of the water.
- Turn off all the main electrical switches.
- If you can detach the boat after a rock slide, check the condition of the engine.
- Inspect the boat for leaks.
- To avoid further damage to the engine, do not drive the boat if, for example, you notice an oil leak or the engine blade is damaged.
- If the leak is small, the boat is detached and at least one of the engines is functioning, drive to the nearest shore to prevent the boat from sinking.
- If a life raft is available and required, prepare it for use.
- If you detect a leak, close all doors and hatches. Open doors and hatches may cause the boat to drown more quickly.
- Do not go inside of the boat if it has a leak.
- Call for towing assistance from local authorities or other agencies.
- A professional should inspect the boat after grounding. Even if there is no visible leak, the hull may be damaged and in need of repair.

⚠ WARNING A big leak may cause the boat to sink quickly. Do not go or stay in and wear a life jacket.

6.4 Handling the boat

6.4.1 Checklist: Boat handling before leaving harbor

For safe navigation under all weather conditions, proper sound signaling equipment in compliance with regulations (COLREG, 1972) must be carried on board. Make sure that the sound signaling equipment on the boat is compliant with these regulations.

⚠ CAUTION According to national regulations in some countries, it is a legal requirement to wear a life vest at all times.

Before leaving the harbor, check the following:

- Check that the boat and its equipment are in seaworthy condition.
- Always listen to long-term weather forecasts when planning longer trips.
- Always make sure there is enough freshwater in the tanks.
- Check that all items on board are properly stowed and adequately secured to manage rough sea and wind conditions.
- Make sure that the swim ladder is raised out of the water before moving off.
- Make sure that the steering is correctly positioned before starting.
- All persons on board must wear an appropriate life vest when on deck.

© 2026 Axopar Boats

6.4.2 Leaving the jetty

Before casting off, consider how to best leave the jetty.

- Check what the wind direction is.
- Using a bow thruster, move the bow out and then engage the propeller.
- If the boat has two engines, move away from the jetty by engaging the engine nearer the jetty astern at idling speed and engaging the other engine ahead at idling speed on.
- The boat will swing out from the jetty astern. As the bow will move against the jetty, fend off properly.

With only one engine this can be a little more challenging, especially if the wind is pressing the boat firmly against the jetty, you have to use a spring to get the stern out.

- Firmly fend off the bow from the jetty.
- Take a line from the bow around a bollard or cleat, so that it can be easily let go.
- Engage idling speed ahead and turn the rudder so that the stern glides out from the jetty.
- When the boat has reached a position, where it can safely be reversed, release and retrieve the line, quickly center the rudder and engage astern.

⚠ CAUTION Gather in all lines and fenders while you are still in sheltered water. A rope around the propeller can disable a boat.

6.4.3 Driving the boat

Going out in a motor boat involves responsibility not just to those on board, but also to others we meet on the water. Showing consideration for others makes boating comfortable. Everyone has the same right to be at sea, whatever kind of boat they go afloat in.

The physical laws that apply to a boat are rather different from, for example, those affecting a car, as are the possibilities of controlling it.

You can influence a boat's behavior and the level of comfort on board primarily by adapting the speed to the prevailing sea conditions and by the intelligent use of the trim tabs. A planing boat rides almost level in the water at maximum speed. As the speed of the boat is reduced the trim angle increases and the bow rises slightly. This is normal, and is a prerequisite for good performance.

6.4.3.1 Emergency stop

If the boat is equipped with an emergency stop, attach its lanyard to yourself immediately after detaching the mooring lines. For more detailed instructions, see the engine manual.

It is very important that the boat stops if you for some reason fall overboard or stumble on board, particularly if you are alone. However, remember to detach the lanyard from your wrist before docking or beaching operations to prevent the engine from stopping unintentionally.

Unintended activation of the emergency stop during normal operation can occur and may lead to hazardous situations, including:

© 2026 Axopar Boats

- Sudden loss of forward motion: passengers, especially those seated at the bow, may be thrown forward unexpectedly. In severe cases, individuals could be ejected overboard and risk injury from the gearcase or propeller.
- Loss of power and steering control: this can be critical in challenging conditions such as heavy seas, strong currents, or high winds.
- Reduced maneuverability during docking: unexpected engine shutdown may result in loss of control when approaching docks or other vessels.

The emergency stop is designed to stop the engine immediately if the lanyard is pulled with enough force to detach from the switch. This feature helps prevent accidents if the operator falls overboard or loses control.

To reset the emergency stop, thread the loop at the end of the lanyard around the emergency stop and push the emergency stop back up. The emergency stop can also be reset without the lanyard by pushing the emergency stop back to up position if the situation requires it.

If your boat is equipped with an emergency stop model that cannot be reset without the lanyard, you must keep a spare lanyard on board. Store the spare lanyard near the steering console for quick access. If your boat did not come with a spare lanyard, request one from your dealer.

Always inform passengers about how the emergency system works before departure.

6.4.3.2 Driving at high speed

Although the boats have passed the CE requirements for swerve tests at full speed, Axopar Boats does not recommend making sharp turns at high speed. When exceeding a certain speed limit any hull construction might lose its grip. This might lead to passengers hurtling out of the boat, especially in a single engine configuration.

- Do not use the boat if it has an engine with a higher power rating than indicated on the capacity plate.
- Do not drive the boat at high speed if the engine's rig angle is negative (bow down).
- Do not drive at full speed on congested waterways or if the visibility is limited because of weather conditions or waves.
- Reduce your speed and wake as a matter of courtesy, and also for the safety of yourself and others.
- Observe and obey speed limits and prohibitions associated with a swell.
- Follow the rules of navigation and the requirements of COLREG (Convention on the International Regulations for Preventing Collisions at Sea).
- Always make sure that you have the space needed for avoiding collisions and coming to a halt and for evasive maneuvers.
- Always use an emergency stop if available.
- Reduce speed in high seas for increased comfort and safety.
- Learn the boat's speed potential. Utilize this knowledge for economical and safe cruising.
- Avoid using high speed along with large rudder movements when going astern, because that places great strain on the rudder and steering mechanism.
- Avoid sudden steering maneuvers at high speeds.
- Avoid staying in the bow area when driving at high speeds.

© 2026 Axopar Boats

Avoid sudden changes in travel direction at high speed. Let the boat come to a stop, and the engine rev down before shifting between forward and reverse. Otherwise excessive strain is put on the engine, which could cause the engine to stop. In the worst case, sea water may enter the engine.

A right-handed propeller rotates clockwise and a left-handed propeller anti-clockwise, seen from the stern. The rotation of the propeller is critical for steering the boat. The right-handed propeller pushes the stern of the boat to starboard when the engine is engaged ahead and to port when it is going astern. The direction of rotation of the propeller has a major impact on the turning radius. A right-handed propeller gives a smaller turning radius to port than to starboard. This is called the propeller's paddlewheel effect.

The boat's propellers have considerable propulsion power that provides powerful acceleration. Take this into consideration to avoid dangerous situations arising from this.

⚠ DANGER

A revolving propeller is life-threatening to a swimmer or a person who has fallen overboard.

Use the emergency stop and turn off the engine when someone is climbing on board.

6.4.3.3 Driving in rough seas

Never go out in rough seas, if you are uncertain whether the boat and those on board can cope. Follow these simple rules.

- Be well prepared.
- Remember to secure loose equipment.
- Always have a sea anchor and other emergency equipment easily accessible.
- Avoid breaking seas that can appear close to land and over shallows.
- If there are significant waves, always reduce speed to guarantee the safety of the persons on board.
- Use the trim tab to trim the bow down to reduce hull slamming in a head sea.

In a head sea

- Adjust speed to suit the size of the waves.
- Adjust the trim angle to the size of the waves. Avoid taking seas beam on.

In a following sea

Remember to keep the bow high in a following sea. Avoid crashing through waves, maintain low speed. If necessary, deploy the sea anchor to reduce speed.

Planing boats can be particularly exposed in rough following seas. The stern of the boat rises and the rudder does not answer, so the boat broaches while the bow cuts down into the sea.

6.4.3.4 Maneuvering in narrow channels

When maneuvering the boat in narrow channels, the engine speed must be kept as low as possible so that maneuvers are calm and steady.

In difficult wind and current conditions, more revs might be necessary to make full use of the power of the engine. In these conditions, it is important that maneuvers are made quickly and precisely to prevent the boat from drifting into trouble for example.

© 2026 Axopar Boats

A good rule before starting a maneuver under difficult conditions, is to think through the different situations which could arise. Pay attention to the wind and current conditions and decide in advance which maneuver you will make. It is also important to brief crew members on what they need to do in different situations.

Always keep in mind that the stability of the boat may be reduced when towing.

⚠ CAUTION Even a nonslip molding can be slippery to walk on when the deck is wet.

6.4.4 Visibility from steering position

The International Regulations for Preventing Collisions at Sea (COLREG) demand that a proper lookout is kept at all times, and the *right of way* rule is followed.

The following factors can considerably reduce visibility, among other things:

- Gear trim angle
- Trim tab angle
- Load and load position
- Speed
- Rapid acceleration
- Changeover from displacement speed to planing
- Sea conditions
- Rain and thunderstorms
- Darkness and fog
- Inner lighting when under way in the dark
- Position of curtains
- People and equipment that block the driver's view.

If boat is driven under clear planing speeds, visibility of operator may be blocked by bow. Use of trim tabs and engine trim may be used to lower the bow.

⚠ WARNING Visibility from the seated position is limited. Maintain lookout and control the trim of the boat if needed.

⚠ WARNING Make only small adjustments to trim tab positions at a time. Holding down the button for the trim tab for any length of time can result in partial loss of control of the boat.

⚠ WARNING Bow U-sofa bolsters limit visibility from steering position. Cushions must be removed while driving.

© 2026 Axopar Boats

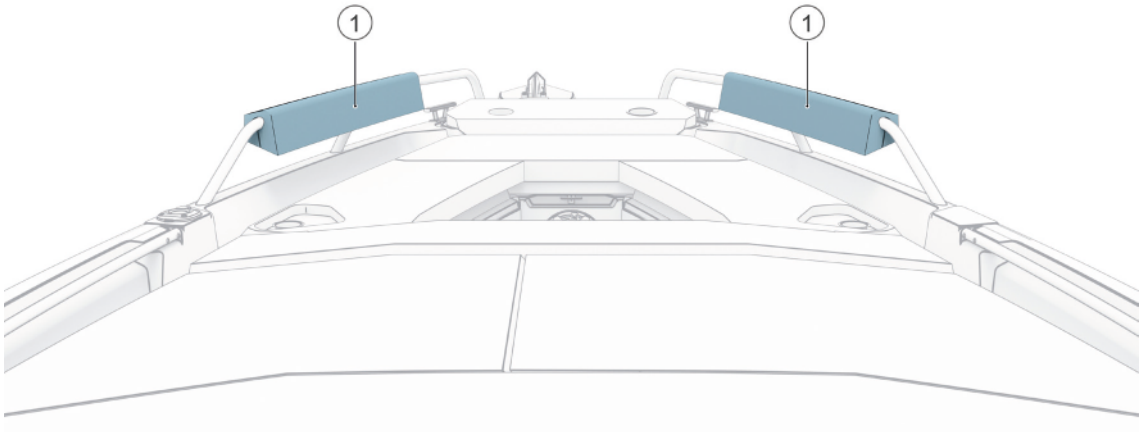

(1) U-sofa bolsters

⚠ WARNING Visibility from the seated position at the helm station is limited. Avoid serious injury or death from collisions. Operation from a standing position may be necessary to maintain lookout as required by rules of the road.

6.4.5 Using the trim tabs

A boat does not need trim tabs to get up on the plane or to give good performance. However, trim tabs are a very useful aid when used correctly.

There are two situations in particular where the trim tabs need to be used:

- When it is desirable to trim the bow down in a rising sea and at speeds between going up planing and cruising speed.
- When running with a strong beam wind.

A planing boat always leans into a strong side wind. This reduces the boat's seakeeping qualities, which is why listing to one side needs to be eliminated as far as possible. Lowering the trim tab on the windward side brings the boat back into normal attitude.

For trimming the bow down, both trim tabs are used in parallel. Begin by retracting both trim tabs completely, then lower both of them a little at a time, so that you retain complete control over how the boat is affected. When running with a following sea, both trim tabs always need to be fully raised. The reason for this is that boats have a tendency to "dive" in a strong following sea, which can result in uncontrollable slowing. Therefore you must run the boat with a high bow angle in a following sea.

6.5 Preventing falling overboard

The boat's working decks are areas where people can move about when the boat is being maneuvered.

The working deck area is shown in blue in the figure.

© 2026 Axopar Boats

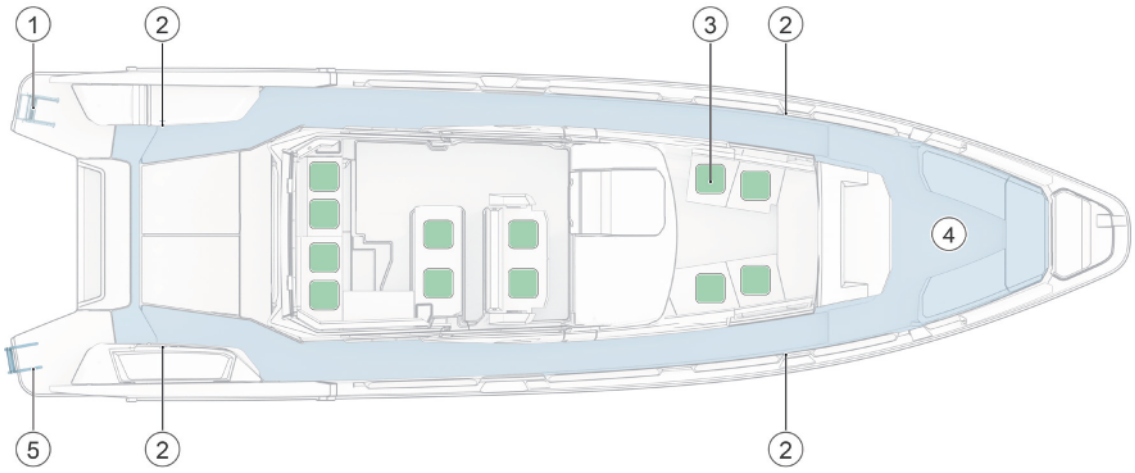

(1) Ladder
(2) Hooking points for safety harness
(3) Seats (four seats inside the front cabin)
(4) Working deck area
(5) Optional swim ladder

Boat is equipped with hooking points for safety harness. If you need to work on deck on heavy seas, it is recommended to wear a life jacket with harness and use a lifeline.

Moving about in the aft part of the aft deck and on the front deck while the boat is under way is not recommended.

If a person has fallen into the water, the easiest way to get back on board is to use the swim ladder. The ladder can be pulled down also from the water.

Staying on deck

⚠ WARNING Staying in the bow of the boat is not recommended in speeds exceeding 30 knots.

⚠ DANGER A revolving propeller is life-threatening to a swimmer or a person who has fallen overboard.

- Use the emergency stop.
- Turn off the engine when someone is climbing on board.

If the sun deck cushions or the front deck table are in place, observe the maximum speed of 15 knots to avoid the cushions or table detaching at speed or in high waves.

© 2026 Axopar Boats

6.6 Anchoring, docking and mooring

6.6.1 Fastening points

Fastening points (or cleats) are located both at the stern, midship and bow.

- When anchoring or towing, the forward force is 44 kN.
- When mooring the forward force is 36 kN.
- When mooring the rearward force is 31 kN.

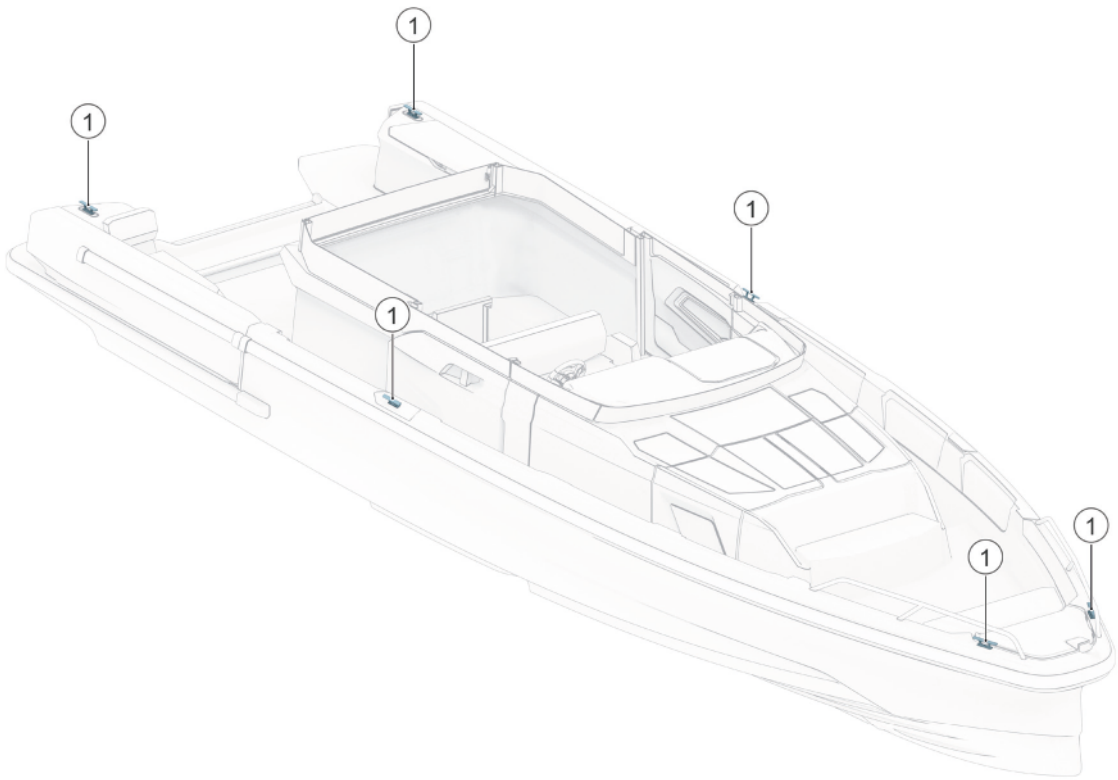

(1) Fastening points

⚠ CAUTION The breaking strength of lines shall in general not exceed 80% of the breaking strength of the fastening points.

6.6.2 Docking

Always brief your crew how you are planning to dock. Fenders and at least one mooring line fore and aft must be in place before approaching the jetty.

© 2026 Axopar Boats

It is always easiest to dock against the wind. Try to hold the bow exactly into the wind and maintain sufficient speed for the boat to answer the rudder. If the bow is blown off in one direction, back out and repeat the maneuver. Bring the bow up to the jetty, and make sure you get a line ashore quickly.

Docking with a side wind is a little more difficult. Do not steer parallel to the jetty letting the boat blow in as there is always a risk of the bow being blown off towards other boats or the jetty. Instead, try to maneuver the boat so that the wind comes directly from astern. Then the boat can be maneuvered straight ahead since the wind helps hold the boat on a straight course. It is good to have someone on the foredeck that can go ashore and quickly turn the bow in the desired direction after the boat has stopped completely.

Try to always avoid sharp movements of the throttle, since idling speed in ahead and astern is generally adequate. Sharp movements of the throttle can lead to panic maneuvers.

⚠ CAUTION The tensile strength of the lines or chains should normally not exceed the strength of the fastening point in question.

6.6.3 Checklist: Before anchoring

1. Check the chart to see if anchoring is permitted in the area.
2. Listen to the weather forecast for the area and take note of the expected wind conditions.
3. Switch on the echo sounder.
4. Study the seabed conditions and make sure that there is good holding ground.
5. Check that the safety chain has been released from the anchor.
6. Wait until you have reached the intended anchoring point before lowering the anchor.
7. Let out the anchor line equal to at least three times the depth of the water.
8. Put the engine in astern to check that the anchor has taken hold (only when bow anchoring).
9. Note your position on the GPS. Regularly check that the boat has not moved from its position.
10. Set the echo sounder to “Anchor Watch”.

⚠ WARNING Always fix the anchor in such a way that it is securely fastened onto the boat. An anchor that falls off when under way may cause serious damage to the boat and mortal danger to the crew.

6.6.4 Towing and mooring

⚠ CAUTION When towing another boat or being towed, always drive slowly. If the boat you are towing is of the displacement hull type, never exceed its hull speed.

- Always attach the tow line so that it can be detached under load. It is the owner’s and users' responsibility to ensure that the mooring lines, towing lines, anchor chains, anchor lines and anchors are adequate for the vessel’s intended use.
- Always remember that the stability of the boat may decrease when being towed.

© 2026 Axopar Boats

7 Maintenance

7.1 Cleaning and maintaining the gelcoat surface

The gelcoat surface of the boat is subjected to environmental conditions which can, under certain circumstances, lead to deterioration of the surface. Overtime, these external factors such as saltwater, high UV exposure and temperature variation, can have an effect on the gelcoat surface.

Generally, gelcoat should last 3 years without showing any significant signs of yellowing, chalking, or other deterioration in typical conditions.

NOTICE

Clean and maintain regularly all the gelcoat surfaces on the boat.

If the regular cleaning and maintenance is neglected, or if the boat is exposed to certain environmental conditions where it is berthed, deterioration of the surface finish such as fading, discoloration and brittles may become visible over time.

- Wash and clean the boat after every trip, and weekly if it is stored outside uncovered.
- Wax the boat twice a year if used all year, otherwise annually.
- Inspect the gelcoat surface annually for signs of deterioration, such as brittle surfaces or changed color tones.
- Small scratches or discolorations can be fixed by buffing or polishing.
- Severe scratches, discoloration or oxidation may require wet sanding before buffing, polishing and vaxing.

  Wet sanding is recommended to be performed by your Axopar dealer or a trained professional.
- When the boat is not in use, keep the gelcoat surface out of the sun or cover the boat with a canvas tarpaulin.

  Do not use plastic or other non-porous materials, which can trap moisture between the cover and the surface.

Washing

NOTICE

Use a cleaning product specially made for boats. Do not use household cleaning products, chlorine, acids or similar as they may damage the boat surface due to their improper pH value.

Wash the boat after every trip by using a mild cleaning product. Dilute the cleaning product with fresh water according to the instructions on the product label.

1. Rinse the deck and hull with fresh water to remove loose dirt.
2. Wash the surfaces with the diluted cleaning product and a soft-bristled brush.
3. Rinse off with fresh water.

Waxing

Waxing the gelcoat surface restores gloss and protects the finish. Only use wax recommended for gelcoat, and follow the product instructions carefully.

© 2026 Axopar Boats

Wax can either be applied by hand using a clean rag, or with an orbital-motion buffing machine.

NOTICE If using a buffing machine, do not exceed the speed of 1200 rpm. Using a higher speed may burn the gelcoat.

NOTICE Do not wax a gelcoat surface in direct sunlight.

1. Apply wax and wait for a few minutes until the wax looks dry.
2. Buff the wax either by hand using a clean rag, or by using a buffing machine.

   Buff in circular motions until the surface is clean and glossy.
3. Finish by wiping the potential wax residues off with a clean rag.

Polishing and buffing

Small scratches or discolorations can be fixed by polishing and buffing the boat. If the surface has severe discoloration or oxidation, wet sanding is recommended before polishing and buffing.

- Polishing compounds remove small scratches and discolorations.
- Buffing compounds contain abrasive and remove deeper scratches or oxidation.

  Buffing compounds can be used, for example, to remove scratches on the hull caused by the fenders.
- After using the buffing compound, use polishing compound to achieve the best possible finish.
- Follow the product instructions of the compound carefully.

Polishing and buffing compounds can either be applied by hand using a clean rag, or with an orbital-motion buffing machine with a polishing pad.

NOTICE When using a buffing machine, do not exceed the speed of 1200 rpm. Using a higher speed may burn the gelcoat.

NOTICE Do not polish or buff a gelcoat surface in direct sunlight.

1. Apply polishing or buffing compound on the surface and wait for a few minutes until the compound looks dry.
2. Polish or buff the compound either by hand using a clean rag, or by using a buffing machine with a polishing pad.

   Buff in circular motions until the surface is glossy.
3. Wax the surface.

Wet sanding

NOTICE Wet sanding is recommended to be performed by your Axopar dealer or a trained professional.

© 2026 Axopar Boats

Severe scratches, discoloration or oxidation of the gelcoat surface may require wet sanding. Wet sanding can be done either by hand or by using a machine.

NOTICE When using a machine, do not exceed the speed of 1200 rpm.

Using a higher speed may burn the gelcoat.

NOTICE Do not wet sand a gelcoat surface in direct sunlight.

1. Spray water to the area that needs to be sanded.

   NOTICE Keep the surface continuously moist while sanding.

2. Sand the surface with a 1000 grit sandpaper (for example Mirka Abralon).

   If you use a machine, use a low rpm speed to get the best result.

   Keep sanding until the entire surface is equally matt.
3. Sand the surface with a finer 1400 grit sandpaper.
4. Sand the surface once more with an even finer-grit sandpaper.

   This saves time in the buffing and polishing stage.
5. After sanding, when the surface looks equally matt, rinse the surface with fresh water and allow to dry.
6. Buff and polish the surface to get the gloss back.
7. Wax the surface.

7.2 Antifouling

Painting your boat's hull with antifouling paint is worth considering if your boat is most of the season in water.

Boats that are frequently lifted out of the water and relaunched during the boating season can be affected by antifouling oxidization. Out-of-the water, antifouling paint will oxidize, which will prevent the biocide release and slowly cause antifouling to lose its effectiveness. Follow the paint manufacturer's specifications for launching window.

Antifouling wears gradually over time, depending on factors such as the location where the boat is used and how often the boat is used. As a rule of thumb, antifouling lasts one season once applied. When the antifouling needs to be repainted, it is important to use the same antifouling paint as the existing antifoul, or to scrub off old antifouling paint down to gel coat. If different antifouling paints are used, there is a risk that the composition of the paints are incompatible, preventing the antifouling paint from working.

Contact your nearest Axopar dealer in antifouling repainting and condition inspection related matters.

© 2026 Axopar Boats

7.3 Maintaining the interiors

7.3.1 Wooden interiors

The interior details of the boat, such as the locker doors and drawer fronts and wooden strips, are made of oiled wood.

- Clean the wooden interior details with a damp cloth and a small amount of soapy water.
- Treat the wooden surfaces again every year to protect the wood.

7.3.2 Plastic and painted surfaces

1. Wet the surface evenly with water before the actual cleaning.
2. Remove stains.
    - Remove regular stains with a brush and a lightly diluted cleaner.
    - Remove grease with a brush or a sponge and window cleaner.
3. Clean the surface afterwards with sponge and water.
4. Wipe dry with a piece of cloth.

7.3.3 Fabrics

The interior fabrics are washed according to separate washing instructions (marking on the fabric).

In case the marking is not visible:

1. Wash in 40°C with a light spin cycle.
2. Hang to drip dry.

The material may slightly shrink. If you want to avoid shrinking, take the fabrics to a dry cleaner.

7.3.4 Doors and hatches

- Clean the tracks of sliding doors and hatches regularly and lubricate, if necessary.
- Lubricate handles and locks with regular lock lubricant.

7.4 Maintaining the cover

New covers may leak initially, as the seams need to swell.

During use

To prevent quick deterioration of the cover, secure it tightly in a folded-up position to prevent flapping.

© 2026 Axopar Boats

After use

NOTICE

- Hang to dry. Never use a drying cabinet or iron to speed up drying.
- Check that the cover is completely dry before stowing. Stowing a moist cover can cause mold damage.
- Store the cover in dry indoor conditions for the winter.

7.4.1 Cleaning the cover

The cover needs to be thoroughly cleaned two or three times a year.

NOTICE

Never use high pressure washers or chemical cleaning agents.

1. Let the fabric cover soak for at least 24 hours.
2. After soaking, wash the inside and outside of the cover with a sponge or a soft brush.

   Use mild soapy water and plenty of water, max. 30°C.
3. Rinse thoroughly with freshwater.

   Mix 12% vinegar in the final rinsing water to neutralize the soap residues.
4. Hang the cover to drip dry.

7.5 Protecting underwater metal parts

Boat's underwater metal components, such as thru-hulls, seacocks, trim tabs, engine internal components and propellers, are subject to electrolytic corrosion. Electrolysis and galvanic corrosion (corrosion of dissimilar metals in salt water) can occur in marine environment due to external factors such as stray currents, polluted waters, or proximity of other vessels. It is important for boat owner to be aware of the phenomena, as they can cause serious deterioration over time.

Signs of electrolytic corrosion are, for example, white, powdery substance on exposed metal such as propellers or breakers, or thru-hulls and seacocks turning greenish. If the corrosion has progressed far, even deep pitting can appear on the part’s surface.

The boats are equipped with sacrificial anodes to protect the metal parts from galvanic corrosion. Additionally, boats equipped with shore power have galvanic isolators to stop low voltage currents from flowing through the boat.

All underwater metal parts need to be inspected annually for signs of corrosion. Additionally, underwater thru-hulls and seacocks are recommended to be replaced every 5 years. Please see the section ***Preventing corrosion*** for more details.

7.6 Preventing corrosion

Sacrificial anodes are installed on the boat’s trim tabs and engines to protect metallic parts from corrosion damage. The anodes need to be replaced regularly as they wear out to protect other metallic parts.

© 2026 Axopar Boats

- Inspect the anodes monthly.
- Replace them when approximately fifty percent of the anode has deteriorated.

In general, anodes need replacement once a year in fresh water, and more frequently in saltwater environment. If there is an increase in the consumption speed, it can be a sign of electrical issue and the root cause should be investigated.

7.7 Preventing frost damage

- The bilge pump system is fitted with a water lock on the hose.
  - Detach the hose and fully drain the water from the water lock and run the pumps dry. Otherwise the pumps may freeze and break.
- Unscrew the frost plug on the underside of the shower fittings.
  - If there is no frost plug, unscrew the shower hose.
- Drain the water tank and all other components containing water in order to avoid frost damage.
- Run the freshwater pump dry to drain out all the water.
- Make sure that no water remains in the boat under any circumstances. Leave the hatches in the cabin partially open.

7.8 Checklist: Before winter lay-up

- Wash the hull and bottom immediately after lifting the vessel out of the water.
- Wash all parts inside, also under the floorboards.
- Leave all lockers, drawers, and cabin and wardrobe doors open.
- Remove the carpets.
  - Store the carpets and cushions indoors in a dry place.
  - If this is not possible, make sure that the cushions are dry and position them on their side.
- Disconnect and service the fridge.
  - Switch off the power and disconnect the power supply.
  - Defrost the fridge.
  - Clean and dry the exterior and the interior of the fridge.
  - Empty and dry the condensate water tray.
  - Leave the door slightly ajar to enable ventilation.
  - Check the more detailed instruction in the manufacturer's manual.
- Ensure good ventilation in the boat.

NOTICE If the batteries are left aboard, make sure they are fully charged, otherwise the batteries can freeze and crack.

© 2026 Axopar Boats

7.9 Checklist: Before launching

1. Remove the tarpaulin in good time before launching.
2. Wash the hull with a regular shampoo and a soft brush.
3. Wax the hull, if necessary.

   Use a standard boat wax.
4. If there are small scratches on the hull or if some of the surface gelcoat has lost its shine, use a rubbing compound on these areas before polishing.
5. Paint the bottom with antifouling paint.
6. If the batteries have been removed, put them back and check the electrolyte level in the cells.

   Check the condition of the batteries.
7. Check all cables, clamps, engine mountings and other fastenings.
8. Check the steering before launching.
9. Check the instrumentation.
10. Close all water drain plugs.
11. Check that the seacocks are tight and in order, check for any frost damage.
12. Check all pipes, hoses and cocks.
13. Make a note of any frost damage.

7.10 Corrective maintenance

7.10.1 Deposits

Mild detergents and fine rubbing compounds reduce the weathering and calcium deposits accumulated on the surfaces.

NOTICE Do not apply the rubbing compound in direct sunlight.

- Use only a fine grit compound, and follow the label instructions carefully.
- For the best result, wax the surface after treating it with the rubbing compound.

7.10.2 Scratches and nicks

Most scratches and nicks can be removed by using a rubbing compound followed by waxing.

7.10.3 Stains

Most stains can be removed by washing with a mild detergent.

© 2026 Axopar Boats

- For stubborn stains, use a tine abrasive household cleanser followed by waxing to restore original luster.
- For non-water-soluble stains, such as grease, oil, and rubber heel marks, use a solvent such as acetone, rubbing alcohol, toluene or xylene, followed by a mild detergent.
    - If these solvents are not effective, try a rubbing compound or fine sanding followed by waxing.

7.10.4 Deep marks, gouges and holes

Deep marks, gouges and holes should be repaired professionally.

Gelcoats can be well repaired by professionals, and in most cases the repair will be undetectable.

NOTICE

In cases where the damage has pierced the gelcoat layer, further exposure to water or chemicals should be avoided.

Failure to observe this precaution may result in extensive and potentially costly damage to the underlying laminate structure.

© 2026 Axopar Boats

8 Environment

When handling environmentally hazardous substances such as fuel, oils, solvents, grease, bottom coats, you need to consider the following:

- Always read the instructions for each product carefully and handle the product with care.
  - Make sure that the used packaging, cans and similar items are discarded in designated collection points.
  - If you are in any doubt whether the product is hazardous or not, contact the supplier or vendor of the product.
- The backwash from boats wears down the shoreline and creates problems for other boats near you.
  - Always adjust your speed to the situation and the surroundings to avoid unnecessary backwash.
- Always drive the boat at the most economical engine revs possible, taking the prevailing conditions into account, to avoid unnecessary emissions and noise.
- Make sure that the engine is properly serviced at regular intervals so that noise and emission levels are minimized.
  - Read the engine manufacturer's manual carefully.
- As a boat owner you must be aware of the local environmental laws, and respect codes of good practice.
  - Never empty the septic or blackwater tank into water.
  - Familiarize yourself with the international regulations on the prevention of marine pollution (MARPOL) and comply with these regulations.
- Always investigate the source of any oil leaks as soon as possible.
- Dispose of recovered spilt oil correctly.
- Keep oil-absorbing cloths or rolls on board.
- Never dispose of overboard any oil, paint or other chemical that is potentially harmful to the environment. Sanctions are in place in most parts of the world for those who disregard this rule!

⚠ WARNING Any oil must be treated as chemical waste.

8.1 Requirements for North America

The EPA standards state that in freshwater lakes, freshwater reservoirs or other freshwater impoundments whose inlets or outlets are such as to prevent the ingress or egress by vessel traffic subject to this regulation, or in rivers not capable of navigation by interstate vessel traffic subject to this regulation, marine sanitation devices certified by the U.S. Coast Guard installed on all vessels shall be designed and operated to prevent the overboard discharge of sewage, treated or untreated, or of any waste derived from sewage.

The EPA standards further state that this shall not be construed to prohibit the carriage of Coast Guard-certified flow-through treatment devices which have been secured so as to prevent such discharges. They also state that waters where a Coast Guard-certified marine sanitation device permitting discharge is allowed include coastal waters and estuaries, the Great Lakes and interconnected waterways,

© 2026 Axopar Boats

freshwater lakes and impoundments accessible through locks, and other flowing waters that are navigable interstate by vessels subject to this regulation (40 CFR 140.3).

© 2026 Axopar Boats

9 Checklists

9.1 Checklist: Fire in the engine

- Stop the engine.
- Steer the boat up against the wind, if possible.
- Make sure all passengers have life jackets.
- If necessary:
  - Evacuate the passengers.
  - Call for sea rescue.
- Shut off fuel, LPG and main power switches.
- Extinguish the fire.
- Wait until fully certain that the fire has been extinguished before opening the engine cover.

  Carefully open the engine cover and be prepared to use the handheld fire extinguisher if necessary for post-fire extinguishing.
- Put out possible smoldering fires with water.

9.2 Checklist: After fire

- Open doors and windows for better ventilation.
- Inspect the boat and its equipment, and repair any damages.
- Contact local authorities, if needed.
- Make sure that the fire extinguishing equipment is refilled or replaced after use.

9.3 Checklist: After grounding

If the boat hits a rock, the damage may be easily visible or hidden.

- Make sure that everyone on board is wearing a life jacket.
- Check that everyone on board is up on the deck.
- If necessary, make an emergency call or use a distress signaling device.
- Immediately after a capsize, check the bilge for leaks. Even if the bilge pump is not rated for leaks, you may try to empty the boat using it.
- Stop the engines and lift them out of the water.
- Turn off all the main electrical switches.
- If you can detach the boat after a rock slide, check the condition of the engine.
- Inspect the boat for leaks.
- To avoid further damage to the engine, do not drive the boat if, for example, you notice an oil leak or the engine blade is damaged.

© 2026 Axopar Boats

- If the leak is small, the boat is detached and at least one of the engines is functioning, drive to the nearest shore to prevent the boat from sinking.
- If a life raft is available and required, prepare it for use.
- If you detect a leak, close all doors and hatches. Open doors and hatches may cause the boat to drown more quickly.
- Do not go inside of the boat if it has a leak.
- Call for towing assistance from local authorities or other agencies.
- A professional should inspect the boat after grounding. Even if there is no visible leak, the hull may be damaged and in need of repair.

⚠ WARNING A big leak may cause the boat to sink quickly. Do not go or stay in and wear a life jacket.

9.4 Checklist: Regular inspection before leaving harbor

Safety

Make sure that:

- All the people onboard have life jackets.
- The wind and wave conditions do not exceed the design category of the boat.
- The emergency stop lanyard is attached to driver.
- There is a fire extinguisher (or several) onboard and their approval/inspection date has not expired.
- The needed ropes and anchor are onboard.

Draining and tightness

Check that:

- There is no water in the bilge.
- All the bilge pumps are functional.
- The bilge has no signs of fuel or oil leaks.
- All deck hatches are tightly closed.

Electrical and engine

Check that:

- All the fuses are intact.
- The main switches are switched on.
- The batteries have enough power.
- The engine works properly.
- The engine cooling water flows as expected.
- The fuel level is sufficient.

© 2026 Axopar Boats

⚠ WARNING The specified tank capacity is not necessarily fully available, depending on the trim and load on board. The tank must always be kept at least 20% full.

9.5 Checklist: After using the boat

Make sure that:

- The main switches are switched off.
- The septic tank discharge valve is closed.
- There is no water in the bilge.
- The bilge pumps are functional.
- The deck draining works properly and all the draining valves are open.
- All deck hatches, roof canvas and doors are tightly closed.

9.6 Checklist: Boat handling before leaving harbor

For safe navigation under all weather conditions, proper sound signaling equipment in compliance with regulations (COLREG, 1972) must be carried on board. Make sure that the sound signaling equipment on the boat is compliant with these regulations.

⚠ CAUTION According to national regulations in some countries, it is a legal requirement to wear a life vest at all times.

Before leaving the harbor, check the following:

- Check that the boat and its equipment are in seaworthy condition.
- Always listen to long-term weather forecasts when planning longer trips.
- Always make sure there is enough freshwater in the tanks.
- Check that all items on board are properly stowed and adequately secured to manage rough sea and wind conditions.
- Make sure that the swim ladder is raised out of the water before moving off.
- Make sure that the steering is correctly positioned before starting.
- All persons on board must wear an appropriate life vest when on deck.

9.7 Checklist: Before anchoring

1. Check the chart to see if anchoring is permitted in the area.
2. Listen to the weather forecast for the area and take note of the expected wind conditions.
3. Switch on the echo sounder.
4. Study the seabed conditions and make sure that there is good holding ground.
5. Check that the safety chain has been released from the anchor.
6. Wait until you have reached the intended anchoring point before lowering the anchor.

© 2026 Axopar Boats

7. Let out the anchor line equal to at least three times the depth of the water.
8. Put the engine in astern to check that the anchor has taken hold (only when bow anchoring).
9. Note your position on the GPS. Regularly check that the boat has not moved from its position.
10. Set the echo sounder to “Anchor Watch”.

⚠ WARNING Always fix the anchor in such a way that it is securely fastened onto the boat. An anchor that falls off when under way may cause serious damage to the boat and mortal danger to the crew.

9.8 Checklist: Before winter lay-up

- Wash the hull and bottom immediately after lifting the vessel out of the water.
- Wash all parts inside, also under the floorboards.
- Leave all lockers, drawers, and cabin and wardrobe doors open.
- Remove the carpets.
  - Store the carpets and cushions indoors in a dry place.
  - If this is not possible, make sure that the cushions are dry and position them on their side.
- Disconnect and service the fridge.
  - Switch off the power and disconnect the power supply.
  - Defrost the fridge.
  - Clean and dry the exterior and the interior of the fridge.
  - Empty and dry the condensate water tray.
  - Leave the door slightly ajar to enable ventilation.
  - Check the more detailed instruction in the manufacturer's manual.
- Ensure good ventilation in the boat.

NOTICE If the batteries are left aboard, make sure they are fully charged, otherwise the batteries can freeze and crack.

9.9 Checklist: Before launching

1. Remove the tarpaulin in good time before launching.
2. Wash the hull with a regular shampoo and a soft brush.
3. Wax the hull, if necessary.

   Use a standard boat wax.
4. If there are small scratches on the hull or if some of the surface gelcoat has lost its shine, use a rubbing compound on these areas before polishing.
5. Paint the bottom with antifouling paint.

© 2026 Axopar Boats

6. If the batteries have been removed, put them back and check the electrolyte level in the cells.

   Check the condition of the batteries.
7. Check all cables, clamps, engine mountings and other fastenings.
8. Check the steering before launching.
9. Check the instrumentation.
10. Close all water drain plugs.
11. Check that the seacocks are tight and in order, check for any frost damage.
12. Check all pipes, hoses and cocks.
13. Make a note of any frost damage.

9.10 Checklist: Fuel system

Check the fuel system before launch and winter lay-up:

- Ensure the fuel fill caps are properly labelled.
- Check that the fuel fill cap is retained (hinge or chain) to prevent falling overboard.
- Inspect any O-rings or gaskets for damage.
- Carefully inspect all hoses, primer bulbs, filters, and connections; recommend replacement as needed.
- Verify proper and secure routing of ventilation ducts.
- Inspect and lean, if possible, all vent fittings.

⚠ WARNING Avoid serious injury or death from fire or explosion resulting from leaking fuel. Inspect system for leaks at least once a year.

9.11 Maintenance log

Regular maintenance tasks are presented in the following table. If you feel confident enough, you can perform all these tasks yourself. If not, please contact your local Axopar dealer for help.

Depending on vessel model and components, every task might not be relevant.

© 2026 Axopar Boats

MAINTENANCE LOG	Frequency				
Task to be performed	Every trip	Every month	Every 3 months	Every 6 months	Annually
Bilge system - Remove, clean and inspect bilge pump, check valve and its surroundings for damage or debris that may reduce the performance of the pump	●				
Waste system - Replace the no-smell carbon filters					●
Waste system - Run the macerator pump					●
Heating system - Run the heater for 10 minutes		●			
Air conditioning system - Clean air filter, seawater strainer and check the system for leaks		●			
Water system - Clean inline filter			●		
Inspect Zinc anodes - Replace all zinc anodes if 50 % has been eaten up				●	
Fire extinguisher inspection					●
CO alarm - Push test button for 1 sec			●		
Smoke alarm - Push test button for 3 sec			●		
Seacocks - Turn handle Open and Close					●
Batteries - Charge state, terminals securely attached and free from corrosion					●
LPG system - Check condition of LPG lines, connectors and LPG shut off valve					●
Fuel system - Check condition of fuel lines, connectors and fuel shutoff valves					●
Inspect fuel tank compartment bilge for water				●	
Livewell pump - Check condition of hoses and connectors			●		
Gelcoat waxing				●	
Clean hull & deck from saltwater	●				
Keep bilge dry and clean	●				
Boat covers - Clean upholstery covers and sunroof cover				●	

© 2026 Axopar Boats